4300 B

Digital Micro Ohmmeter

Operation and Maintenance Manual

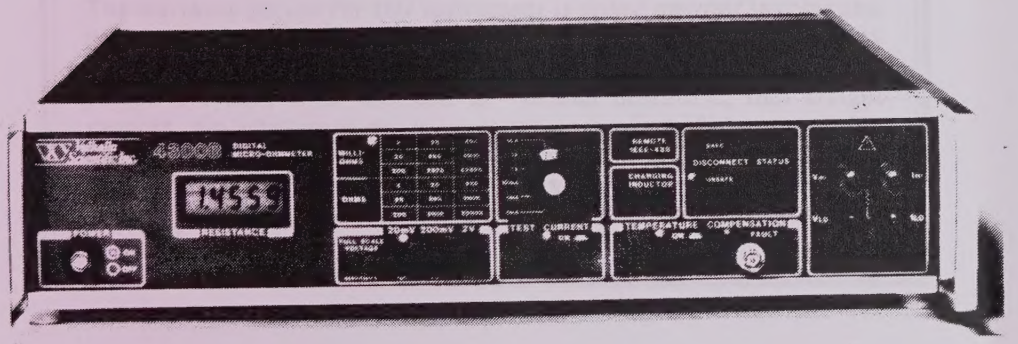

VALHALLA SCIENTIFIC

9955 MESA RIM ROAD
SAN DIEGO, CA 92121
(619) 457-5576
TELEX #181750

REV. 02-89

CERTIFICATION

Valhalla Scientific, Inc. certifies that this instrument was thoroughly tested and inspected and found to meet published specifications when shipped from the factory. Valhalla Scientific, Inc. further certifies that it's calibration measurements are traceable to the National Bureau of Standards to the extent allowed by NBS's calibration facility.

WARRANTY

The warranty period for this instrument is stated on your invoice and packing list. Please refer to these to determine appropriate warranty dates. We will repair or replace the instrument during the warranty period provided it is returned to Valhalla Scientific, Inc. freight prepaid. No other warranty is expressed or implied. We are not liable for consequential damages. Permission and a return authorization number must be obtained directly from the factory for warranty repairs. No liability will be accepted if returned without such permission.

Digitized by the Internet Archive
in 2026

https://archive.org/details/manualsplus_12388

TABLE OF CONTENTS

Paragraph			Page
		SECTION I	
		UNPACKING AND INSTALLATION	
1.1	Unpacking and Inspection		1-1
1.2	Initial Adjustment		1-1
1.3	Instructions for Bench Use		1-1
1.4	Instructions for Rack Mounting		1-1
1.5	Safety Precautions		1-1
		SECTION II	
		SPECIFICATIONS	
2.1	General		2-1
		SECTION III	
		OPTIONS	
3.1	TL-488	IEEE 488 GPIB TALK-LISTEN Interface	3-1
3.2	BCD	BCD Data Outputs	3-1
3.3	AL	Temperature Compensator	3-1
3.4	CU	Temperature Compensator	3-1
3.5	CK	Compensator Extension Cable	3-1
3.6	JAWS	Heavy Duty Kelvin Clip Set	3-1
3.7	K	4-wire Kelvin Lead Set	3-1
3.8	KCS	Gold Plated Kelvin Clip Set	3-1
3.9	KK	4-wire Kelvin Lead Set (with JAWS)	3-1
3.10	KL	Heavy Duty Kelvin Lead Set	3-1
3.11	MP1	Kelvin Micro-Probe Set	3-1
3.12	MP2	Kelvin Mini-Probe Set	3-1
3.13	RX3	Rack Ears	3-1
		SECTION IV	
		MANUAL OPERATION	
4.1	General		4-1
4.2	Connections		4-1
4.3	Setting Test Voltage and Test Current		4-2
4.4	Charging Inductor Mode		4-2
4.5	Cable Disconnect Status Indicators		4-2
4.6	Automatic Temperature Compensation		4-2
		SECTION V	
		TL-488 INTERFACE OPERATION	
5.1	Introduction		5-1
5.2	IEEE-488, An Explanation of the BUS		5-1
5.3	Definitions		5-1
5.4	BUS Description		5-1
5.5	Detailed Description		5-2

5.6 General 5-5
5.7 Simple Commands and Examples 5-6
5.8 SRQ and Serial Poll 5-6

SECTION VI
BCD DATA OPERATION

6.1 General 6-1
6.2 BCD Connector Pin Assignment 6-1

SECTION VII
THEORY OF OPERATION

7.1 General 7-1
7.2 Functional Descriptions 7-1
7.2.1 Reference 7-1
7.2.2 Error Amplifier 7-1
7.2.3 Output Stage 7-1
7.2.4 Range Switching 7-1
7.2.5 Protection Circuit 7-1
7.2.6 Power Supply 7-1
7.2.7 Comparator 7-1
7.2.8 A-D Converter/Clock 7-3
7.2.9 Reference Generator 7-3
7.2.10 LCD Driver/LCD 7-3
7.2.11 Front Panel Controls/Displays/Control Logic 7-3
7.2.12 Power Supply 7-3
7.3 Detailed Circuit Descriptions 7-3
7.3.1 Current Source 7-3
7.3.1.1 Reference 7-3
7.3.1.2 Error Amplifier 7-3
7.3.1.3 Output Stage 7-5
7.3.1.4 Range Switching 7-5
7.3.1.5 Protection Circuit 7-5
7.3.1.6 Power Supply 7-5
7.3.1.7 Comparator 7-5
7.3.2 Voltmeter/Control Logic 7-5
7.3.2.1 A-D Converter/Clock
7.3.2.2 Reference Generator 7-6
7.3.2.3 Liquid Crystal Display Driver/LCD 7-6
7.3.2.4 Front Panel Controls/Displays/Control Logic 7-7
7.3.2.5 Power Supply 7-8

SECTION VIII
CALIBRATION AND MAINTENANCE

8.1 Required Test Equipment 8-1
8.2 General 8-1
8.3 Voltmeter Calibration 8-1
8.3.1 Zero Adjust 8-1
8.3.2 ATC Balance Adjust 8-1
8.3.3 2 Volt Range Adjust 8-1
8.3.4 200mV Range Adjust 8-1
8.3.5 20mV Range Adjust 8-1

8.4	Current Source Calibration	8-1
8.4.1	Reference Adjust	8-1
8.4.2	10 Amp Adjust	8-2
8.4.3	1 Amp Adjust	8-2
8.4.4	.1 Amp Adjust	8-2
8.4.5	10m Amp Adjust	8-2
8.4.7	.1m Amp Adjust	8-2
8.5	Troubleshooting	8-2

SECTION IX
USEFUL HINTS

9.1	General	9-1
9.2	Measuring Inductive Loads	9-1

SECTION X
MANUAL CHANGE INFORMATION

10.1	General	10-1

SECTION XI
DIAGRAMS

11.1	General	11-1
	Schematic, Main PCB	
	Assembly, Main PCB	
	Assembly, Output PCB	
	Schematic, Display PCB	
	Assembly, Display PCB	
	Assembly, Switch PCB	
	Schematic, Chassis	
	Assembly, Rear Panel	
	Assembly, Chassis	
	Schematic BCD PCB	
	Schematic IEEE PCB	

SECTION XII
PARTS LIST

12.1	General	12-1
	Chassis	PL-1
	Rear Panel	PL-4
	Main PCB	PL-9
	Display PCB	PL-14
	Switch PCB	PL-16
	Output PCB	PL-17
	BCD Option PCB	PL-18
	IEEE Option PCB	PL-6

LIST OF TABLES

1.1 Voltage Switch Settings and Fuse Ratings

2.1 Operating Specifications

2.2 Environmental, Power, and Physical Specifications

5.1 ASCII Character Codes

5.2 4300B IEEE Commands

6.1 Option BCD Connector Pinouts

7.1 A-D Converter Buffer Gains

12.1 Federal Supply Codes

LIST OF ILLUSTRATIONS

FIGURE

4-1 Error Sources in Resistance Measurement

7-1 4300B Current Source Block Diagram

7-2 4300B Voltmeter/Logic Block Diagram

SECTION I
UNPACKING AND INSTALLATION

1.1 UNPACKING AND INSTALLATION

If the shipping carton is damaged, request that the carrier's agent be present when the unit is unpacked. If the instrument appears damaged when unpacked, the carrier's agent should authorize repairs before the unit is returned to the factory. Even if the instrument appears undam- aged, it may have suffered internal damage in transit that may not be evident until the unit is operated or tested to verify conformance with its specifi- cations. If the unit fails to operate or fails to meet the per- formance specifications of Section II, notify the carrier's agent and the nearest Valhalla Sales Office. Retain the shipping carton for the carrier's inspection. DO NOT return equipment to Valhalla Scientific or any of its sales offices prior to obtaining authorization to do so.

1.2 INITIAL ADJUSTMENTS

The only adjustments required before placing the unit in operation are to set the rear panel switch to the local power voltage and verify that the proper fuse is installed as listed in Table 1-1.

1.3 INSTRUCTIONS FOR BENCH USE

The unit is delivered with all required hardware for bench use installed and special instructions for use in that manner are not necessary. However, before connecting the unit to the local power source, verify that the power cord is equipped with a three-terminal connector (see the Safety Precautions of paragraph 1.5).

1.4 INSTRUCTIONS FOR RACK MOUNTING

Optional brackets are available for mounting the Model 4300B in an equipment rack. These are listed in Section VII. The size of the unit and the location of its center of gravity dictate that it should be supported on both sides along its entire length through the use of "trays" or slides. If it is to be transported while mounted in a rack, it should be supported so as to prevent upward or downward movement.

Note that the specifications listed in Section II indicate that the accuracy of the unit is degraded at abnormally high temperatures. Therefore it is recommended that blank panels at least 1.75 inches high be installed between this and any other units in the rack to insure freedom of air flow. Under no circumstances should the ambient air temperature around the unit exceed 50°C while the unit is in operation or 70°C when power is removed.

1.5 SAFETY PRECAUTIONS

The power plug should be a three-contact device and should be inserted only into a three-contact mating socket where the third contact provides a ground connection. If power is provided through an extension cable, the ground connection must be continuous. Any discontinuity in the ground lead may render the unit unsafe for use.

SECTION II
SPECIFICATIONS

2.1 GENERAL

The operating specifications are listed in Table 2.1. Power and environmental requirements are listed in Table 2.2. The instrument accuracy may be degraded if the environmental conditions are not within specified limits.

TABLE 2.1 - OPERATING SPECIFICATIONS

Resistance Ranges	Resolution	Range - F.S. Volts:	20mV	200mV	2V
			Test Current		
2m Ω	100 n Ω		10A	---	---
20m Ω	1 u Ω		1A	10A	---
200m Ω	10 u Ω		100mA	1A	10A
2 Ω	100 u Ω		10mA	100mA	1A
20 Ω	1 m Ω		1mA	10mA	100mA
200 Ω	10 m Ω		100 μ A	1mA	10mA
2K Ω	100 m Ω		---	100 μ A	1mA
20K Ω	1Ω		---	---	100 μ A

Accuracy: (180 days 24°C-26°C) ±.03% of reading ± 2 digits
(add ± 2 digits on 20mV range, ± .01% of reading on 10A range)

Temperature Sensors: "AL" and "CU" add ±.05% of reading to instrument accuracy. T.C. is accurate ±10 ppm/°C.

Temperature Coefficient: (5°C to 24°C and 26°C to 50°C) ±.005% of reading per °C.

CMR Ratio: 60dB at DC, 50Hz and 60Hz.

Display: 4 1/2 digit (19999) LCD.

Overload Indication: Display Flashes 1.

Terminal Configuration: Four wire Kelvin (rear panel inputs standard)

Conversion Rate: Approximately 400 mSeconds.

Maximum Input: 500 Amps Peak Induced Current

Compliance Voltage: 7.5 VDC nominal at 10A resistive.

Charging Inductor Mode: 20 VDC nominal compliance while charging inductor.

Current Source OFF Open Circuit Voltage: Less than 20mV.

TABLE 2.2

ENVIRONMENTAL, POWER, AND PHYSICAL REQUIREMENTS

ENVIRONMENTAL

Operating Temperature Range: 0 to 50°C
Humidity: 70% RH at 40°C non-condensing
Storage Temperature Range: -30°C to 70°C

POWER REQUIREMENTS

Power Supply Voltage: 100 - 130 or 200 - 260 Volts
Power Supply Frequency: 50 - 60 Hz (±5%)
Power Supply Consumption: 300 Watts Maximum

PHYSICAL

Dimensions: 99mm H x 432 mm W x 432 mm D
(3.5" x 17" x 17")
Weight: 9.1Kg (20 lbs) NET 11.8Kg (26 lbs) SHIPPING

SECTION III
OPTIONS

3.1 OPTION 488-TL

Option "488-TL" is an IEEE-488 GPIB Talk-Listen interface that allows control through the 488 Bus for automatic programming and resistance measurement data accumulation.

3.2 OPTION BCD

Option "BCD" is a parallel BCD data output interface.

3.3 OPTION AL

Option "AL" is a compensating temperature sensor for aluminum (4030ppm/°C) providing a 20°C reference.

3.4 OPTION CU

Option "CU" is a compensating temperature sensor for copper (3931ppm/°C) providing a 20°C reference.

3.5 OPTION CK

Option "CK" is a shielded extender cable that permits the placement of Options "AL"/"CU" in closer proximity to the resistance under test.

3.6 OPTION JAWS

Option "JAWS" is a heavy duty set of Kelvin clips with 2 inch openings for use on larger bushings, transformers and motors. Use of Option "JAWS" permits fabrication of custom cable set providing true four-wire measurement.

3.7 OPTION K

Option "K" is a shielded, four-wire Kelvin cable set, forty-eight inches in length terminated in "KCS" goldplated clips.

3.8 OPTION KCS

Option "KCS" is a light-weight, gold-plated Kelvin clip set for four-wire measurements on smaller components, and leads. Clips open to 1/2 inch and accommodates current up to 10 amperes.

3.9 OPTION KK

Option "KK" is a shielded, four-wire Kelvin cable set, forty-eight inches in length terminated in "JAWS" clips.

3.10 OPTION KL

Option "KL" is a four-wire "JAWS" cable set, ten feet in length with 10 ampere capacity.

3.11 OPTION MP-1

Option "MP-1" is a 48-inch shielded Kelvin 4-wire cable set with a 1-ampere test current capacity employing a set of Kelvin Micro-Probes. The probes are equipped with stainless steel tips with the V-1 tips separated by 0.05 inch.

3.12 OPTION MP-2

Option "MP-2" is a 48-inch shielded 4-wire cable set equipped with Kelvin Mini-Probes having spring loaded stainless steel tips. The V-1 tips are separated by 0.18 inch. Test current capacity is 10 amperes.

3.13 OPTION RX-3

Option "RX-3" is a set of rack ears to permit rack mounting the Model 4300B.

SECTION IV
MANUAL OPERATION

4.1 GENERAL

This section of the manual contains complete instructions for manually operating the 4300B Digital Micro-Ohmmeter.

4.2 CONNECTIONS

Connections to the 4300B are made via heavy duty 5-way binding posts. A set of rear panel mounted binding posts, in parallel with the front panel posts, allow rear connections to be made in rack mount applications. The four terminal configuration of the 4300B eliminates errors normally caused by test lead and contact resistances. In many applications the contact resistance can exceed the value of the load by several orders of magnitude. The 4300B bypasses this potential error source by providing two terminals of constant current and an additional two terminals for high impedence voltage measurement. The result is a fast, accurate resistance measurement of the load independent of the resistance of the current carrying loads.

Figure 4-1 illustrates how the 4-wire principle is used to eliminate lead wire and contact resistances as potential error sources. The internal current source inherently overcomes all series resistance (within compliance voltage limits) and delivers stable constant current. The high impedence DVM senses the voltage drop across the load. There is no contact and lead resistance error created by the voltage measurement because there is essentially no current flow in the voltage sense leads.

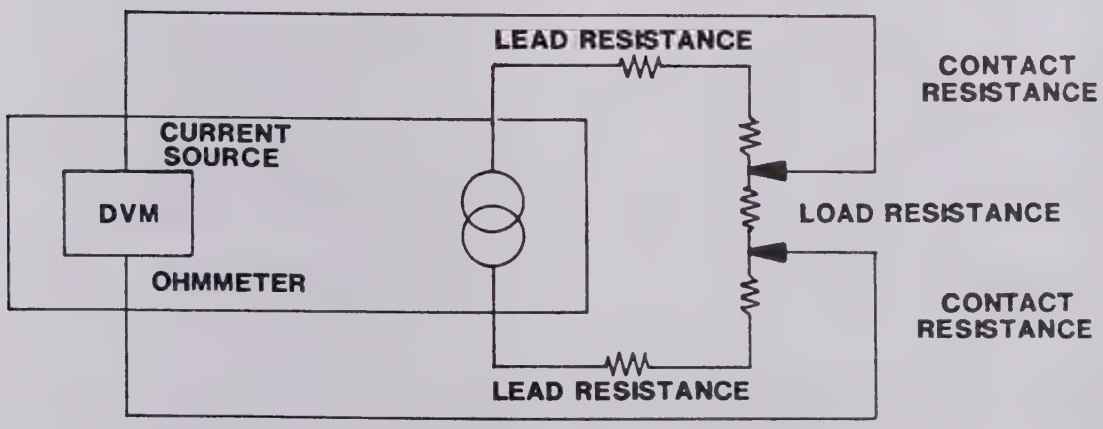

FIGURE 4.1 — ERROR SOURCES IN RESISTANCE MEASUREMENT

4.3 SETTING FULL SCALE VOLTAGE AND TEST CURRENT

The Full Scale voltage is selected via three interlocked push-buttons. Three LEDs directly above the pushbuttons indicate which range has been selected. The Test current is selected via a six position rotary switch. Six LEDs mounted to the left of the switch indicate which test current range has been selected. The Test Current and Full Scale Voltage switch positions determine the resistance range that will be displayed as indicated by the front panel matrix.

The test current can be turned off and on via the Test Current switch. A LED mounted directly above the Test Current switch indicates the current source status.

4.4 CHARGING INDUCTOR MODE

The Charging Inductor mode LED indicates when the current source compliance voltage is exceeded. The 4300B provides a 20 volt output in this mode to reduce the settling time when an inductive load is being measured. The display readings should be ignored when this LED is illuminated.

4.5 CABLE DISCONNECT STATUS INDICATORS

The Safe and Unsafe LEDs indicate when it is safe to disconnect the test leads from the load. When a highly inductive load is being measured, a potentially lethal back-EMF is induced when the test current is removed. The 4300B provides a discharge path for this back-EMF and monitors the voltage. The Safe LED is illuminated when the back-EMF is less than five volts. The Unsafe LED is also illuminated when a test current of .1A or greater is selected and the test current turned ON.

4.6 AUTOMATIC TEMPERATURE COMPENSATION

Automatic Temperature Compensation (ATC) simulates a constant ambient temperature chamber for materials which are normally subject to varying ambient temperatures. When the ATC mode is selected, the temperature sensor (options "AL" and "CU") automatically senses the ambient temperature and compensates the reading to indicate what the actual resistance value should be in a controlled 20°C environment.

The ATC mode is selected by pressing the Temperature Compensation ON pushbutton. A LED mounted directly above this pushbutton indicates when this mode is selected. The temperature sensors are connected to the 4300B via a front panel mounted BNC connector. The temperature sensor may be extended with an Option "CK" compensator extension cable. The Fault LED is illuminated when the ATC mode is selected and the temperature sensor is open circuited indicating faulty compensator connections.

SECTION V
TL-488 OPERATION

5.1 INTRODUCTION

This section of the manual contains complete instructions for operating the 4300B Digital Micro-Ohmmeter over the GPIB (IEEE 488) Bus.

5.2 IEEE-488, AN EXPLANATION OF THE BUS

The reader who is not familiar with the requirements of IEEE Standard 488 (1978) (IEEE-488) will want to review the following paragraphs which provide explanations of terms, commands and some examples of commands. For a complete explanation of the requirements, refer to the IEEE-488 Standard.

In the text of this section, to provide clarity, Ø is used for zero and O is used for the letter "O".

5.3 DEFINITIONS

The following are definitions of the terms used in describing the IEEE-488 interface:

Bus: A data link which is usually a set of several parallel wires within a multi-wire cable.

Bi-Directional Bus: A 'highway' used for two-way communication, with input and output data being carried on the same lines.

Bit Parallel: A data transmission method in which all of the bits comprising an item of data are present simultaneously on a group of wires in a bus.

Byte: A group of data bits (usually 8) which are treated as a single item of data.

Byte Serial: A data transmission method in which information, in bit-parallel bytes, is transferred sequentially between devices.

Device Dependent Message: A message containing commands/data intended for a specific device.

Handshake: An exchange of signals between two devices which is used to control the transfer of data between them.

Interface: The part of an instrument or system which enables it to be connected to another via a bus.

Interface Message: A message intended for interface management.

Local Operation: Operation of a device by its front panel controls (also referred to as Manual Control).

Remote Operation: Operation of device under the control of another bus.

5.4 BUS DESCRIPTION

The IEEE-488 Interfacing Standard (also known as IEC DTC66(WG3), ANSI MC1-1, GP-IB, HP-IB, etc.), defines a bi-directional bus for interconnecting programmable instrumentation in a bit-parallel, byte serial fashion. It defines limitations as follows:

1. A maximum of 15 devices may be interconnected by a single bus.

2. The total bus length may not exceed 20 meters, or the number of devices divided by two, whichever is the shorter.

3. Maximum transmission rate is 1 megabyte per second.

4. All bus data is digital.

Of the devices on the bus, only one may be a controller, exercising control over all other devices and also capable of operating as a talker or listener. The other devices may be listeners (only able to receive data) or talkers (only able to transmit data) or both. The model 4300B is capable of talking and listening. The controller may address other devices and command them to listen or talk. Only one device may talk at any one time.

The interconnecting cable consists of sixteen signal wires and eight ground returns linking devices into a complete system. Each cable connector is a plug/socket combination to permit "daisy-chaining" of units.

Eight data wires (DIO-Ø through DIO-7)

Five management wires (ATN, EDI, SRQ, IFC and REN)

Three "handshake" wires (DAV, NRFD and NDAC)

It should be noted that these wires use "inverse logic". That is to say that a low level indicates the true (asserted) state and a high level indicates a false (nonasserted) state.

5.5 DETAILED DESCRIPTION

The five management wires are described as follows:

ATN - Asserted by the controller whenever an address or a command is present on the bus.

EOI - May be asserted by the controller or any talker. With ATN true, EOI indicates that the controller is polling devices. With ATN false, EOI is asserted by the talker to indicate the end of data.

SRQ - May be asserted by any device. This indicates that the device requires attention (e.g., a fault has occurred). Normally, the controller will respond by polling to determine which device requires service.

IFC - May be asserted only by the controller. This line initializes the bus to a reset state.

REN - May be asserted only by the controller. This signal when asserted, places the addressed device into the remote mode.

The three handshake wires are described as follows.

DAV - May be asserted by any talker, indicates that a valid data byte is present on the data wires.

NRFD - May be asserted by any listener. Indicates that the listener is not ready to receive data.

NDAC - May be asserted by any listener. Indicates that the listener has not yet finished reading the data byte.

The transfer of data on the bus is controlled by these three handshake wires. It is important to note that the drivers for the handshake wires are all connected for wired-on operation. That is, as long as any of the devices on the bus asserts a handshake line, it will remain true. Thus there

must be a complete consensus among the devices for any handshake wire to be high (false).

The talker first waits for all devices to be ready to accept data (checks that NRFD is false) then puts one byte of data on the bus and asserts DAV. It then waits for all devices to indicate that the data has been accepted (that is for NDAC to become false) before starting to transfer the next byte of data. This handshake protocol assures that data on the bus is transferred at the speed of the slowest device on the bus.

Data is sent in 8-bit bytes on the DIO wires, usually (as in the 4300B) using the ISO-7 standard ASCII characters. Table 5-1 lists each ASCII character and the bus messages applicable to each. Note that the table is divided into two main groups; the primary command group and the secondary command group. The secondary command group is not utilized in the 4300B.

The primary command group is further divided into four subgroups as follows:

1. Addressed Command Group - applied only to addressed devices.
2. The Universal Command Group - applied to all devices.
3. The Listen Address Group - set of device listen addresses.
4. The Talk Address Group - set of device talk addresses.

Data in the above command groups is sent with ATN true. When data is sent with ATN false, then it is "device dependent".

Table 5-1 ASCII Character Codes.

ISO BIT & DIO LINE NUMBER → 7 6 5 4 3 2 1	0		1		2		3		4		5		6		7		◀COLUMN ROW ▼
	0 0 0		0 0 1		0 1 0		0 1 1		1 0 0		1 0 1		1 1 0		1 1 1		
	ASCII	MSG	ASCII	MSG	ASCII	MSG	ASCII	MSG	ASCII	MSG	ASCII	MSG	ASCII	MSG	ASCII	MSG	
0 0 0 0	NUL		DLE		SP	00	0	16	@	00	P	16			p		0
0 0 0 1	SOH	GTL	DC1	LLO	!	01	1	17	A	01	Q	17	a		q		1
0 0 1 0	STX		DC2		"	02	2	18	B	02	R	18	b		r		2
0 0 1 1	ETX		DC3		#	03	3	19	C	03	S	19	c		s		3
0 1 0 0	EOT	SDC	DC4	DCL	$	04	4	20	D	04	T	20	d		t		4
0 1 0 1	ENQ	PPC[1]	NAK	PPU	%	05	5	21	E	05	U	21	e		u		5
0 1 1 0	ACK		SYN		&	06	6	22	F	06	V	22	f		v		6
0 1 1 1	BEL		ETB		'	07	7	23	G	07	W	23	g		w		7
1 0 0 0	BS	GET	CAN	SPE	(	08	8	24	H	08	X	24	h		x		8
1 0 0 1	HT	TCT	EM	SPD	)	09	9	25	I	09	Y	25	i		y		9
1 0 1 0	LF		SUB		*	10		26	J	10	Z	26	j		z		10
1 0 1 1	VT		ESC		+	11	:	27	K	11	[	27	k				11
1 1 0 0	FF		FS		,	12	<	28	L	12	\	28	l		|		12
1 1 0 1	CR		GS		-	13	=	29	M	13	]	29	m				13
1 1 1 0	SO		RS		.	14	>	30	N	14		30	n		~		14
1 1 1 1	SI		US		/	15	?	UNL	O	15		UNL	o		DEL		15
	ADDRESSED COMMAND GROUP (ACG)		UNIVERSAL COMMAND GROUP (UCG)		LISTEN ADDRESS GROUP (LAG)				TALK ADDRESS GROUP (TAG)				SECONDARY COMMAND GROUP (SCG)				STANDARD ISO 7 CHARACTERS
	PRIMARY COMMAND GROUP (PCG)																

[1] Requires Secondary Command

Notes

1. Device Address messages shown in decimal
2. Message codes are

DCL	Device Clear	LLO	Local Lockout	SDC	Selected Device Clear
GET	Device Trigger	PPC	Parallel Poll Configure	SPD	Serial Poll Disable
GTL	Go to Local	PPU	Parallel Poll Unconfigure	SPE	Serial Poll Enable

TABLE 5-2
4300B COMMANDS

ASCII CODE	V	I	Q	D	C
0	20mV	0.1mA	NO SRQ	CR LF @ END DATA	Test Current OFF
1	200mV	1mA	SRQ ON 1/P ERROR	CR LF W/EOI	Test Current ON
2	2V	10mA	SRQ ON NEW RDG	CR	
3		100mA		CR WITH EOI	
4		1A			
5		10A			

S Triggers single reading
T Indicates continuous reading mode
L Return to local
A Selects ATC mode
N Selects normal mode

After sending E next data read will be information regarding present 4300B status. For example:

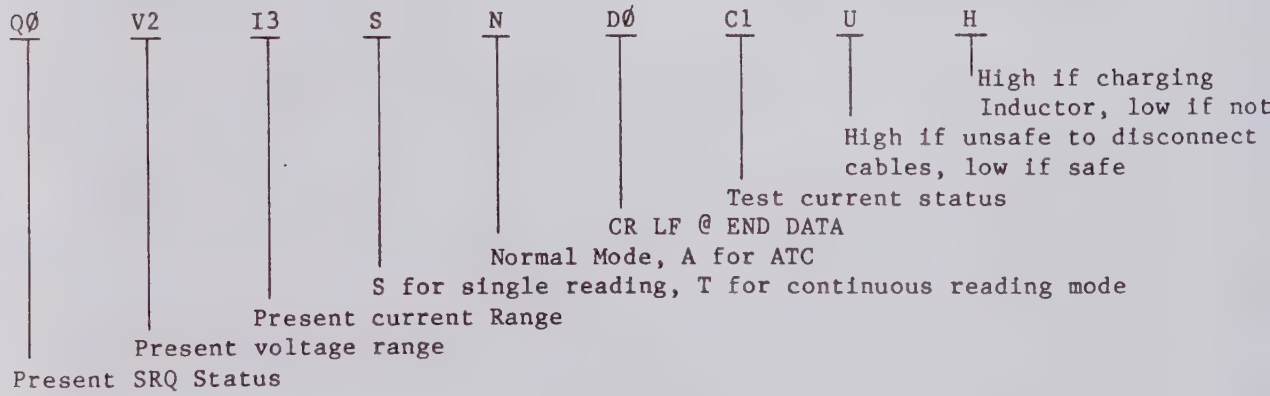

No further commands may be sent until after status is read.

5.6 GENERAL

All IEEE-488 device dependent activity with the 4300B takes place via input and output buffers.

Input Buffer -- Incoming data is placed in the input buffer as it is received. It is not acted upon until any one of the valid input delimiters is received. Then the commands are decoded and the input buffer contents erased. Should an invalid character be found in the input buffer, then the buffer is only decoded up to the error, the rest being discarded. An SRQ can be asserted, if required, should this occur.

The valid input delimiters are:
CR (Carriage Return) or
EOI with the last character.

Output Buffer -- With every display update (except fault messages), the output buffer is filled with the contents of the display. This data may be read by the controller any number of times.

The address of the 4300B is set by means of a five-pole switch on the rear of the unit.

At power-up, the 4300B will be in the local mode, (i.e., the unit will respond to commands entered with the front panel controls). In order for the 4300B to enter the Remote mode, the following sequence, stipulated by IEEE-488 1978 must occur:

1. The remote enable, REN, wire on the bus must be asserted (pulled low).
2. The 4300B must receive its listen address.

With an HP85 computer, this is accomplished by the statement REMOTE 712, assuming that the 4300B address is 12. In all future examples, an HP 85 computer is assumed as is the 4300B address of 12.

When the 4300B is in remote, the REMOTE-IEEE 488 indicator on the front panel will be illuminated and all front panel controls (except POWER) are inhibited.

The computer may reset the 4300B to the local state any time by the command LOCAL 7 (or LOCAL 712 if only the 4300B is to be returned to the LOCAL mode). Note also that a device clear command will return the unit to local control.

5.7 SIMPLE COMMANDS AND EXAMPLES

Example : Output 712; "V213C1" will select the 2 Volt and 100mA ranges and turn on the test current.

5.8 RETURN TO LOCAL

As mentioned previously, the controller may return the unit to local by the normal IEEE local commands. To ensure full compatibility with computers that do not have this capability (e.g. PET) the command "L" will also return the unit to local.

Example: Output 712; "L"

5.9 SRQ AND SERIAL POLL

SRQ Definition -- The 4300B may assert the SRQ wire if an error in input data is detected. This is defined by the user sending "On", where n is the numberic code for the required reasons.

QØ - Disables the 4300B from asserting SRQ

Q1 - Enables the 4300B to assert SRQ

Serial Poll Response Byte -- When the controller in the system conducts a serial poll, the 4300B responds with non-zero byte of data. If the 4300B did not generate SRQ, a zero byte is used as the response.

SECTION VI
BCD DATA OPERATION

6.1 GENERAL

Option "BCD" provides parallel BCD data of what the 4300B is reading. Signals are also provided for range information, overload and end of conversion. A Run/Hold line also is provided to halt the 4300B A-D converter.

6.2 BCD PIN ASSIGNMENTS

PINS 1 TO 17 DATA
This is the BCD coded data which is identical to that being displayed by the 4300B.

PIN 18 OVERLOAD
This is a logic 1 when the above data is an overload indication. (Note: The data is arbitrary during this condition.)

PINS 19 to 21 RANGE
This is a BCD exponent which places the answer as follows:
1.9999×10^{R} milliohms.

RANGE	19	20	21	R
20000 Ω	1	1	1	7
2000 Ω	0	1	1	6
200 Ω	1	0	1	5
20 Ω 20000m Ω	0	0	1	4
2 Ω /2000m Ω	1	1	0	3
200m Ω	0	1	0	2
20m Ω	1	0	0	1
2m Ω	0	0	0	0

PIN 22 END OF CONVERSION
A logic 1 signal indicates that a measurement is in progress. Note that the data (pins 1 to 18) is not valid until 10 milliseconds after the high-to-low transition of this signal.

PIN 23 RUN/HOLD
A logic 1 (or open circuit) on this pin enables the unit to perform continuous measurements. When taken low the unit completes the measurement in progress and halts. A pulse of 300nS will initiate a further measurement.

PIN 24 0 VOLTS
All signals are referenced to this pin. The signals are TTL compatible (0 ≤.8V, ≤1 2.4V) which will drive 1 LS TTL load.

The mating connector for the BCD option is a 24 pin Male Amphenol 57 series connector. The BCD connector pinout is detailed in table 6.1.

TABLE 6.1

4300B "BCD" PINOUT

PIN #		
1	1	
2	2	
3	4	
4	8	
5	10	
6	20	
7	40	
8	80	
9	100	DATA
10	200	
11	400	
12	800	
13	1000	
14	2000	
15	4000	
16	8000	
17	10000	
18	OVERLOAD	
19	RANGE 1	
20	RANGE 2	
21	RANGE 4	
22	EOC	
23	R/H	
24	0 VOLTS	

SECTION VII
THEORY OF OPERATION

7.1 GENERAL

The information contained in this section describes the theory of operation of the 4300B Digital Micro-Ohmmeter. The theory is divided into two sections. The first is a functional description referring to the block diagrams of figures 7.1 and 7.2. The second section is a detailed description referring to the diagrams of Section XI.

7.2 FUNCTIONAL DESCRIPTIONS

This section describes the general operation of each section of the Model 4300B. The paragraph titles used in this section refer to the block diagrams of figures 7.1 and 7.2.

7.2.1 Reference

The current source reference voltage is provided by an internally ovened integrated circuit reference and its associated components. The reference circuit provides a 1.0000 volt output to the error amplifier circuit.

7.2.2 Error Amplifier

The error amplifier compares the reference voltage with the signal from the range switching circuit to drive the output stage. The ON/OFF signal from the control logic commands the error amplifier to turn off the output stage.

7.2.3 Output Stage

The output stage provides current gain capable of driving 10 amps into the unknown resistance. The ON/OFF signal from the control logic shorts the current source output when the test current is turned off.

7.2.4 Range Switching

The range switching circuits provide six ranges of precision current shunts to control the output current. The current shunt valves are selected so that one volt is dropped across the shunt for each current range (e.g. 10A in 1V out 1A in 1V out etc.). The operation of the current source is as follows: Current from the power supply flows through the load, output stage and current shunt. The voltage dropped across the shunt is compared to the reference voltage by the error amplifier. The error amplifier drives the output stage controlling the current in the load and shunt. Negative feedback drives both inputs of the error amplifier to the reference voltage producing a precise load current.

7.2.5 Protection Circuit

The protection circuit protects the output stage from inductive kickback voltages. The SAFE signal indicates the presence of back EMF from the load.

7.2.6 Power Supply

The power supply provides one of two operating voltages for the current source. The output voltage is controlled by the comparator.

7.2.7 Comparator

The comparator detects when the error amplifier is against its end stop indicating the current source is charging an inductor. When an inductor is being charged, the comparator commands

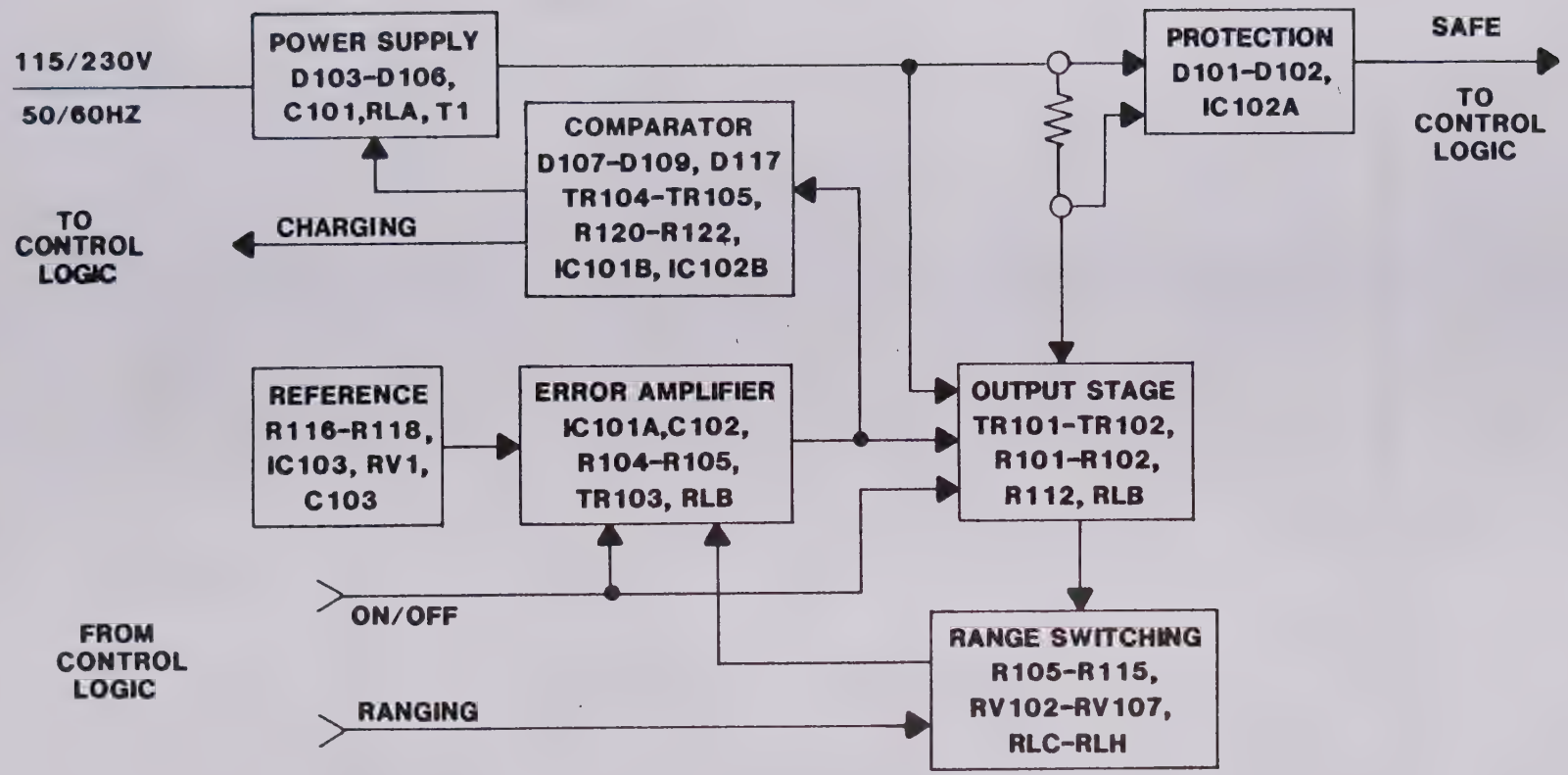

FIGURE 7.1 — 4300B CURRENT SOURCE BLOCK DIAGRAM

the power supply to output a higher voltage to reduce the ohmmeter settling time.

7.2.8 A-D Converter/Clock

The A-D Converter measures the voltage dropped across the load resistance and converts the value into multiplexed BCD data. The A-D converter is a dual slope type. The clock oscillator supplies the necessary timing signals for the A-D converter. The A-D converter range is controlled via the control logic.

7.2.9 Reference Generator

The Reference Generator provides one of three reference voltages for the A-D Converter. When the ATC mode is selected, the temperature sensor (Option "AL" or "CU") compensates the Reference Generator output. The Reference Generator is controlled via the Control Logic.

7.2.10 LCD Driver/LCD

The LCD Driver demultiplexes the BCD data from the A-D Converter and provides the necessary signal conditioning to drive the liquid crystal display. The decimal point position is controlled via the Control Logic.

7.2.11 Front Panel Controls/Displays/ Control Logic

The Control Logic provides an interface between the Front Panel Controls and displays and the other circuitry of the 4300B. The Control Logic disables the Front Panel Controls when the Option "TL-488" is fitted and activiated.

7.2.12 Power Supply

The Power Supply provides the necessary operating voltages required by the Control Logic, A-D Converter and Displays.

7.3 DETAILED CIRCUIT DESCRIPTIONS

This section describes in detail the operation at each circuit of the Model 4300B. The reference designators used in this section are those of the schematic diagrams of Section XI.

7.3.1 Current Source

The operation of the Current Source is described in the following paragraphs.

7.3.1.1 Reference

IC103 along with the R16-R118 and RV101 form a temperature stabilized voltage reference. IC103 is a precision 6.95 volt ovened zener diode. The zener current is limited by resistor R116. A voltage divider comprised of R117, RV101, and R118 divide the zener voltage down to 1.0000 volts. Capacitor C103 removes any noise riding on the reference output.

7.3.1.2 Error Amplifier

The error amplifier is comprised of C101, IC101A, R104, R105 RLB-2 and TR103. IC101A provides high DC gain to drive transistor TR103 via resistors R104. C102 provides local AC feedback around IC101A for stability. TR103 provides base current to the output stage. Relay contact RLB-2 is closed when the test current is turned off which removes the gate drive to TR103.

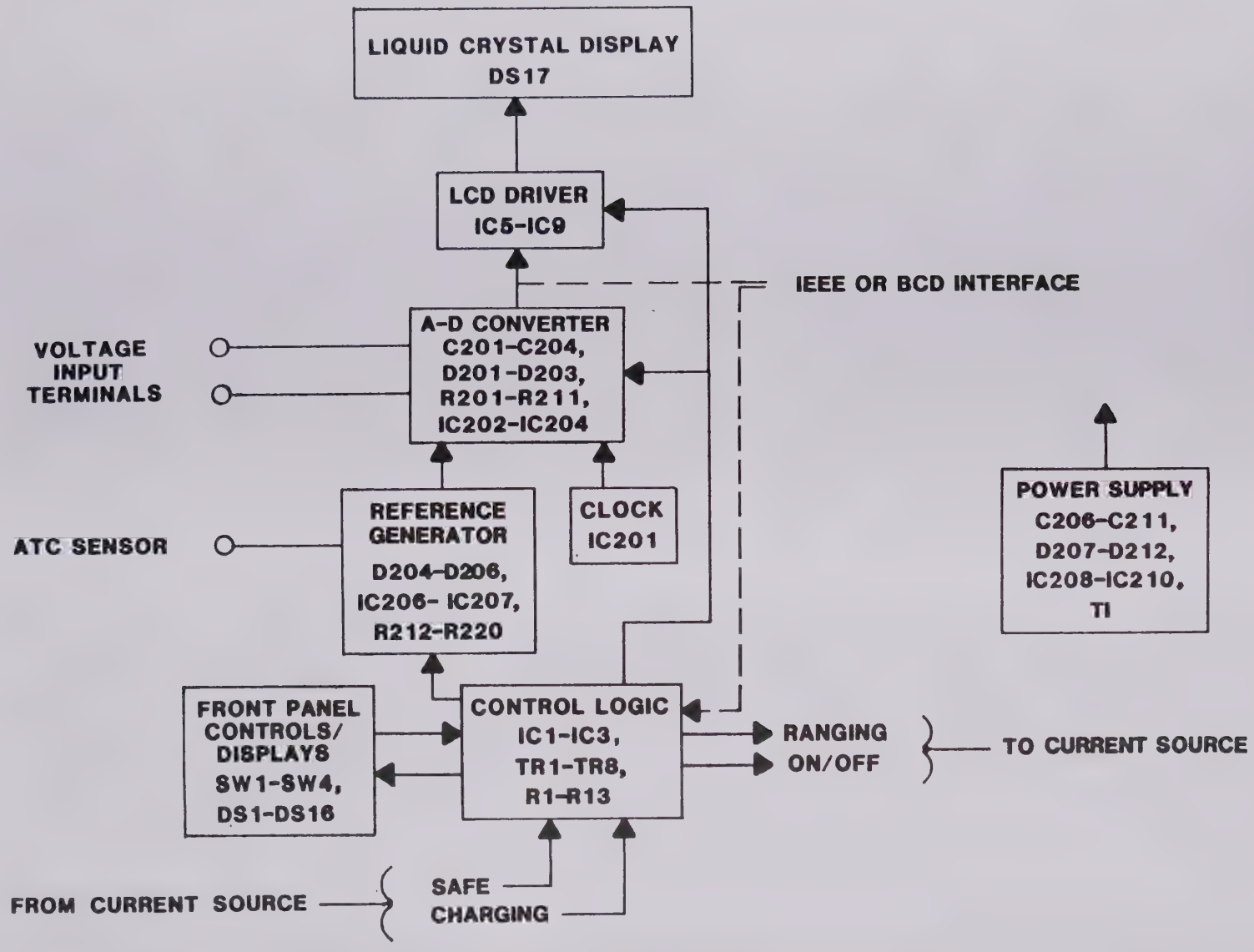

FIGURE 7.2 — 4300B VOLTMETER/LOGIC BLOCK DIAGRAM

7.3.1.3 Output Stage

The Output Stage, comprised of TR101, TR102, R101, R102, R126 and RLB-1 provides current gain capable of sinking 10 amps. Base drive for transistors TR101 and TR102 is provided by the error amplifier. Resistors R101, and R102 equalize the emitter currents in the two output devices. Relay contact RLB-1 is closed when the test current is turned off which connects resistor R126 across the output terminals to reduce the output voltage to less than 20mV.

7.3.1.4 Range Switching

Range selection is accomplished by selecting one or more of the precision current shunts R105, R107, R109, R111, R113 or R115. Relays RLC thru RLH select the appropriate combination of the shunts. Only one range relay is ever energized at the same time. Resistors R106, R108, R110, R112, and R114 along with potentiometers RV102 thru RV105 are used to trim the shunts to their proper value.

7.3.1.5 Protection Circuit

The protection circuit is comprised of diodes D101, and D102, opto-isolator IC102-A and resistors R123 and R124. The two diodes provide a discharge path for inductive loads. D102 conducts when the back EMF from the load is greater than 5 volts turning on the opto-coupler thru R123 and R124.

7.3.1.6 Power Supply

Relay RLA selects which secondary tap is applied to the bridge rectifier comprised of diodes D103-D106. Capacitor C101 smooths the rectified AC voltage. Relay RLA is controlled by the comparator circuit to provide a high voltage to reduce settling time when an inductive load is being charged.

7.3.1.7 Comparator

The gate voltage of TR103 is compared to a reference volage defined by D107-D109. When the gate voltage exceeds the reference voltage TR105 conducts energizing relay RLA and opto-coupler IC102-B. Transistors TR104 and TR105 form a schmidt trigger circuit to reduce relay chattering. Buffer IC101-B isolates the gate drive circuit from the comparator to reduce rail injected noise.

7.3.2 Voltmeter/Control Logic

The operation of the voltmeter and control logic is described in the following paragraphs.

7.3.2.1 A-D Converter/Clock

Most of the A-D converter ciruitry is contained in IC's 202 and 203 along with their associated components. IC202 contains the digital section of a 4 1/2 digit dual slope A-D converter; the analog section is contained in IC203.

The operating cycle of the dual slope integrating A-D converter is divided into three phases whose duration is set by an external clock. The clock is provided by IC201, a self contained 100KHz CMOS crystal controlled oscillator.

During the first, or Auto Zero phase, the analog input is internally shorted to analog ground and C203 is charged to the integrator's output offset voltage. During the next two

phases, the capacitor voltage, which is connected to the integrator's non-inverting input subtracts from the analog input cancelling the offset. During the second, or input integrate phase, the input voltage is connected to the integrator via the buffer comprised of IC204 and associated components, and IC203 integrates the input for a precise time (10,000 counts of the clock) by charging C204 linearly towards the input voltage. The buffer gain is controlled by analog switch IC207 and relay RLK. The gain of the buffer along with the reference voltage determines the A-D converters full scale range. The A-D converter full scale voltages are tabulated in Table 7.1

The waveform on C204 is a very linear ramp whose slope is proportional to the input voltage. Thus, the charge on C204 at the end of the integrate phase is also proportional to the input voltage.

During the third or reference integrate phase, a fixed reference voltage of polarity opposite the input voltage is applied to the integrator. IC203 begins discharging C203 towards the reference voltage. Because this voltage is fixed, the discharge slope is constant. Therefore, the time required to discharge C203 back to zero is proportional to the input voltage. This time is measured by a counter internal to IC202 counting clock cycles. These counts are latched in a multiplexer, also internal to IC202 at the end of the count period. The result is a multiplexed BCD output proportional to the input voltage. The full scale voltage of the A-D converter is dependent on the buffer gain and also the reference voltage.

7.3.2.2 Reference Generator

The reference generator provides one of three temperature compensated voltages to the A-D converter. IC205 is an oven stabilized zener diode providing a 6.95 volt nominal output to the voltage divider comprised of R213, RV202 and R214 or the option "AL"/"CU" probe.

The output of the voltage divider is amplified by IC206 and associated components. Variable resistor RV203 allows adjustment of the amplifier gain to establish a 1.0000 volt reference. The 1.0000 volt reference is applied to the voltage divider comprised of R218-R220, RV204 and RV205. The voltage divider provides 100.00mV and 10.000mV outputs. Analog switch, IC207, selects which reference voltage is applied to the A-D converter. When the ATC mode is selected, and the ATC probe circuit is open circuited, the output of IC206 goes to the positive rail. Diode D204 provides level shifting to produce a TTL compatible signal to the control logic.

7.3.2.3 Liquid Crystal Display Driver/LCD

Most of the LCD driver circuitry is contained in IC7. IC7 decodes the multiplexed BCD and provides proper signal levels to drive the LCD. The multiplexed BCD from the A-D converter is applied to IC7 via IC's 8 and 9. The four digit lines are qualified by the S signal from the A-D converter. The four BCD lines are OR'ed with the overrange (OR) signal from the A-D converter when an overrange occurs the four data lines go to a high state. The display driver blanks the display for this input code. IC6 provides

TABLE 7.1 - A-D CONVERTER BUFFER GAIN

REF VOLTAGE	BUFFER GAIN		
	1	10	100
10mV	-----	-----	19.999mV
100mV	-----	.19999V	-----
1V	1.9999V	-----	-----

FULL SCALE VOLTAGE

level shifting to drive the polarity sign and the 1 digit. The decimal points are driven via exclusive or gate IC5.

7.3.2.4 Front Panel Controls/ Displays/Control Logic

The front panel controls utilize negative true TTL logic levels, e.g. $\leq$ 8V=0 $\geq$ 2.4V=1 for controlling the instrument. The front panel controls are enabled via transistor TR1. The "TL-488" option PCB pulls the REM line low to disable the front panel controls. LED, DS2 is illuminated when the REM line is low indicating remote operation. The front panel controls are diode OR'ed with the outputs of the "TL-488" PCB to allow remote operation.

The voltage and current ranges are determined by IC2 and 3. IC3 is a BCD to decimal converter which decodes the current range switch and provides a one of six active low output that drives the LEDs DS8-DS13 and the current source range relays. The current range switch information also goes to the PROM, IC2, along with the voltage range switch information. The PROM provides three active low outputs to drive the voltage range LEDs DS14-DS16 and the A-D converter reference generator range inputs. The PROM decodes the voltage and current range information to provide four decimal point lines to the LCD driver circuitry. Another output from the PROM tells the cable disconnect status logic is comprised of TR3, TR6-TR8 and associated components. The logic makes the decision that it is unsafe to disconnect the cables when (1) the test current is on and 100mA or greater test current

is selected or (2) the back EMF from an inductive load is greater than five volts. The charging inductor LED is driven by the CHG signal via transistor TR4. The test current or LED is driven by TR2 and its associated components. TR6 drives the current source test current OFF relay. The ATC ON LED and ATC relay in the reference generator are driven by TR5.

7.3.2.5 Power Supply

Power for the voltmeter and control logic circuits is provided by two windings of transformer T1. The AC voltages are rectified by diodes D207 to D212.

Capacitors C206, C208, and C210 filter the rectified AC providing unregulated DC to voltage regulators IC208-IC210. Capacitors C207, C209, and C211 smooth the regulated DC power supply voltages.

SECTION VIII
CALIBRATION AND MAINTENANCE

8.1 REQUIRED TEST EQUIPMENT

The following test equipment is required to calibrate the 4300B Digital Micro-Ohmmeter.

1) D.C. Voltage Standard 1.0000V, .1000V, .010000V ± .005% (Valhalla 2701B or equivalent)

2) Precision Resistors
   .1000 Ω
   1.0000 Ω (with known
   10.000 Ω values to with-
   100.00 Ω in ±0.005%)
   1000.0 Ω
   10000 Ω

8.2 GENERAL

This section provides general information for calibrating the 4300B. The unit should be operated for 30 minutes with the top cover in place prior to calibration. The top cover should be replaced after each adjustment has been made. Time should be allowed for the temperature to stabilize following each adjustment. The 4300B digital micro-ohmmeter should be calibrated on a routine basis, no other maintenance need be performed.

8.3 VOLTMETER CALIBRATION

The following procedure should be followed when calibrating the voltmeter section of the 4300B. In all cases, the test current should be TURNED OFF, and 1mA range selected.

8.3.1 Zero Adjustment

Select the 20mV range and short the input terminals. Adjust RV201 for a reading of 0.000.

8.3.2 ATC Balance Adjustment

This adjustment should only be performed after components in the reference generator have been replaced and need not be performed on a routine basis.

Select the 20mV range. Apply 10.000mV to the input terminals and connect a 1.00K .05% resistor to the ATC connector. Alternatively select and deselect the ATC mode. Adjust RV202 for minimum shift in readings between normal and ATC modes.

8.3.3 2 Volt Range Adjust

Select the 2 Volt range and apply 1.0000 volts to the input terminals. Adjust RV203 for a reading of 1000.0.

8.3.4 200mV Range Adjustment

Select the 200mV range and apply .1000 volts to the input terminals. Adjust RV204 for a reading of 100.00.

8.3.5 20mV Range Adjustment

Select the 20mV range and apply 10.000mV to the input terminals. Adjust RV20~~4~~ for a reading of 10000. RV205

8.4 CURRENT SOURCE CALIBRATION

The following procedure should be followed when calibrating the current source section of the 4300B. In all cases, the current source is calibrated to the voltmeter. Alternately, an external voltmeter may be used.

8.4.1 Reference Adjustment

This adjustment should only be performed after components in the reference section have been replaced and need not be

performed on a routine basis.

Connect the Voltmeter low terminal to 0Vs (Top of R118) and the voltmeter high terminal to IC101 pin 3. Select the 2 volt range. Adjust RV101 for 1.0000 volts.

8.4.2 10 AMP Adjustment

Connect the .1 resistor to the 4300B using four wire connections. Select the 2 volt and 10 amp ranges. Adjust RV102 for a reading of .10000 ohms.

8.4.3 1 AMP Adjustment

Connect the 1 ohm resistor to the 4300B using four wire connectors. Select the 2 volt and 1 amp ranges. Adjust RV103 for a reading of 1.0000 ohms.

8.4.4 .1 AMP Adjustment

Connect the 10 ohm resistor to the 4300B using four wire connections. Select the 2 volt and .1 amp ranges. Adjust RV104 for a reading of 10.000 ohms.

8.4.5 10mA Adjustment

Connect the 100 ohm resistor to the 4300B using four wire connections. Select the 2 volt and 10mA ranges. Adjust RV105 for a reading of 100.00 ohms.

8.4.6 1mA Adjustment

Connect the 1000 ohm resistor to the 4300B using four wire connections. Select the 2 volt and 1mA ranges. Adjust RV106 for a reading of 1000.0 ohms.

8.4.7 .1mA Adjustment

Connect the 10000 ohm resistor to the 4300B using four wire connections. Select the 2 volt and .1mA ranges. Adjust RV107 for a reading of 10000 ohms.

8.5 TROUBLESHOOTING

Apparent difficulties are often due to misinterpretation of specifications or to noise pickup at the instrument input. Be sure the instrument is truly malfunctioning before attempting repairs. When attempting to repair a complex instrument, localize the malfunction to the greatest possible extent before beginning the actual process of troubleshooting individual components. For example, if a malfunction is noted on one range, check the performance on the other ranges to determine whether the malfunction is common to all. This approach saves time and eliminates needless component changes. When troubleshooting the 4300B, refer to the theory of operation (Section VII) and the schematic diagrams of Section XI.

SECTION IX
USEFUL HINTS

9.1 GENERAL

This section contains a number of useful hints that will assist the user in obtaining maximum utility from the Model 4300B. As experience with the Model 4300B in the field is accumulated, this section will be expanded in later revisions of this manual.

9.2 USING THE 4300B WITH HIGHLY INDUCTIVE LOADS

The 4300B digital micro-ohmmeter is well suited for the determination of the resistance of transformer windings due to its wide range of test currents (100uA to 10A) and excellent resolution (100 nano-ohms on the most sensitive range). There are, however, three situations which occur, due to high inductance which require particular care.

1. CONNECTIONS AND SETTLING TIME

When connecting the cables to the transformer, care should be taken not to draw an arc. The test current should be turned off and the cables positively clamped onto the transformer.

With large transformers the settling time of the 4300B is determined by the compliance of the current source.

Typically the compliance voltage of the 4300B in the charging inductor mode is 20 volts. Thus, with an inductance of 1000 Henries (a large transformer) the unit will take approximately 10 minutes to settle. During settling, the unit will display overload.

The actual equation is as follows:

$$T = \frac{L \times I}{V}$$

where -

T = Settling time in seconds
L = Inductance in Henries
I = Current in Amps
V = Compliance voltage of 4300B

Note that the higher the test current, the longer the settling time.

2. NOISE

When measuring very low resistances of very high inductance transformers, care should be taken to reduce 60Hz pickup and movement should be reduced to a minimum. The noise pickup is caused by the very high impedance of the transformer at 60Hz given by:

$$Z = 377 \times L$$

Thus, with a 1000 Henry transformer the impedance at 60Hz is 377Kohm across which many millivolts of 60Hz noise may be induced.

3. DISCONNECTING THE CABLES

During disconnection of the cables from the transformer, extreme care must have been taken to have already discharged the inductance or an extremely high energy, high voltage "kick back" will occur which is LETHAL to the user and can certainly hurt the 4300B. There are two methods of discharging the inductance.

a) Using the "Flyback Diode" in the 4300B.

As can be seen in Figure 1, the 4300B has an internal diode which can sink the excess current coming from the inductance. Thus turning off the test current or reducing the 4300B's current from the original test current to a low value (less than 10mA) will automatically discharge the inductor into the Flyback diode. The cables should not be disconnected until the safe cable disconnect status LED is illuminated.

The time required to discharge the inductance into the Flyback diode is given by:

$$T = \frac{L \times I}{V}$$

T = Discharge time in seconds
L = Inductance in Henries
I = Current in Amps
V = Flyback Diode voltage drop (typically 6 volts)

Thus a 1000 Henry inductor will take approximately 30 minutes to discharge. During discharge the 4300B will read overload until the inductance has completely discharged. The reading will then return close to Zero.

b) Using a Shorting Switch

In this case, the transformer terminals are shorted by a switch. This causes the current, maintained by the inductance, to flow through the cables and switch. This current discharges with a time constant of L/R seconds where R is the combined transformer, leads, and switch resistance. The unit is safe to disconnect when the circulating current is under 10mA, thus, approximately 7 time constants (7 x L/R) must be allowed if 10 amps was being used.

In a typical application R would be about 1 milli ohm (.001Ω) and L would be 1000 Henries. Thus, 7,000,000 seconds is required! (10 weeks). The 4300B may be disconnected at any time, if the short circuit is maintained across the secondary winding.

Test Current	Discharge Time
10 Amps	7 x L/R
1 Amp	5 x L/R
.1 Amp	2 x L/R
10m Amp	Not Required

SECTION X
MANUAL CHANGE INFORMATION

At Valhalla, we continually strive to keep up with the latest electronic developments by adding circuit and component improvements to our instruments as soon as they are developed and tested.

Sometimes due to printing and shipping requirements, we can't get these changes immediately into printed manuals. Hence, your manual may contain new change information on the following pages.

A single change may affect several sections. Since the information sheets are carried in the manual until all changes are permanently entered, some duplication may occur. If no change pages appear following this page, your manual is correct as printed.

Thank you.

SECTION XI
DIAGRAMS

11.1 GENERAL

The illustrations of this section are the schematic, logic and assembly diagrams of the Model 4300B. To the extent practical, an assembly diagram is adjacent to the appropriate schematic or logic diagram. All diagrams are reductions of factory engineering drawings.

NOTES: (UNLESS OTHERWISE SPECIFIED)

1 ALL UNMARKED DIODES ARE 1N4148

ECO	LTR	DESCRIPTION	DATE	APPROVED
	A	RELEASED W.R.W. 8-9-83		
1003	B	ADDED D119 + TR106. CHANGED IC103	5-13-87	
1148	C	DELETED R117 C16. C206 GWM	1-10-89	CRL

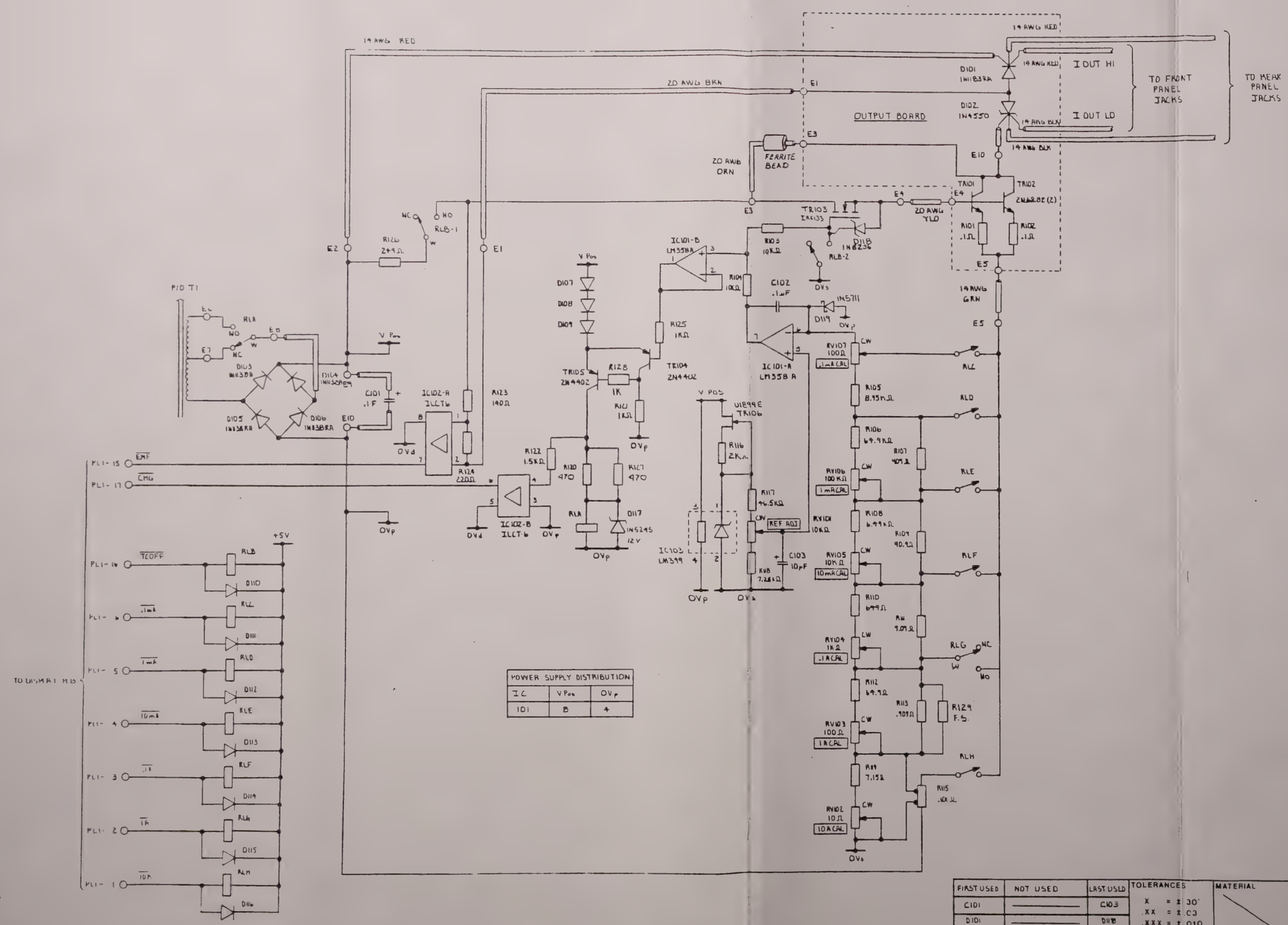

POWER SUPPLY DISTRIBUTION		
IC	V Pos	OVp
101	8	4

FIRST USED	NOT USED	LAST USED
C101		C103
D101		D118
IC101		IC103
R101		R129
RV101		RV107
RLA		RLH
DASH NO / QTY REQD	NEXT ASSEMBLY	USED ON

TOLERANCES: X = ± 30' ; .XX = ± .03 ; .XXX = ± .010

BREAK ALL SHARP CORNERS AND EDGES. MACH SURFACES 64

MATERIAL

FINISH

DRAWN		6-10-83
CHECKED		5/26/87
APPR		7-21-83
STK NO		

Valhalla Scientific Inc. SAN DIEGO CA

4300B MAIN PCB

SCALE	CODE IDENT	SIZE	DRAWING NO	REV
SHEET 1 OF 2	53504	D	4300-072	C

NOTES: (UNLESS OTHERWISE SPECIFIED)

1. ALL UNMARKED DIODES ARE 1N4148.

REVISIONS				
ECO	LTR	DESCRIPTION	DATE	APPROVED
	A	RELEASED W.P.W. 8-9-83		
367	B	UPDATED RDN	5-25-84	

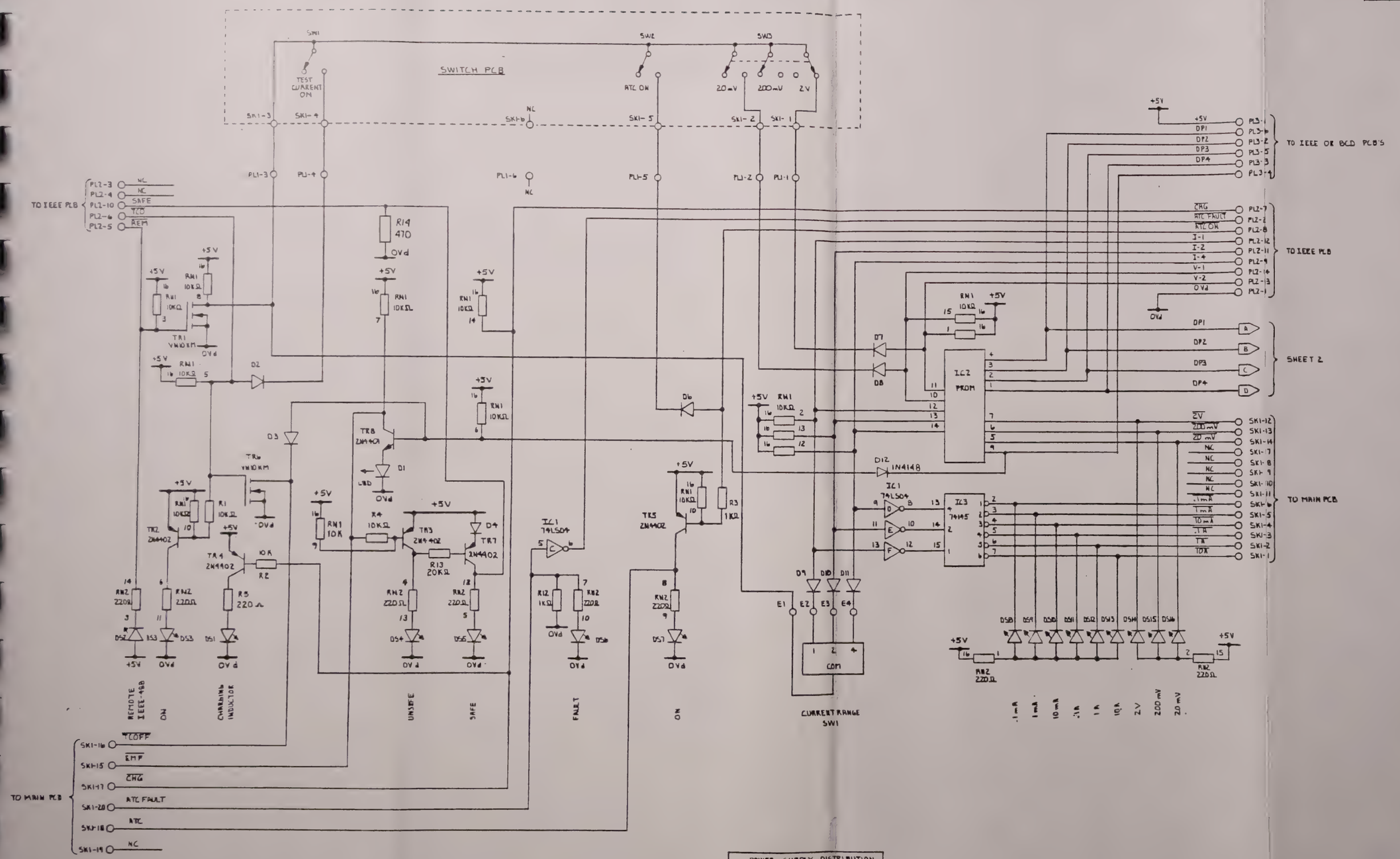

POWER SUPPLY DISTRIBUTION		
IC	+5V	OVd
1	14	7
2	16	8, 15
3	16	8, 12

FIRST USED		NOT USED	LAST USED
D1		D5	D11
D51			D516
IC1			IC3
RN1			RN2
R1		R6 - R11	R14
TR1			TR8
DASH NO	QTY REQD	NEXT ASSEMBLY	USED ON

TOLERANCES
X = ± .30
.XX = ± .03
.XXX = ± .010

BREAK ALL SHARP CORNERS AND EDGES, MACH SURFACES 64

MATERIAL

FINISH

DRAWN JWM	5/11/83	
CHECKED		
APPR RJ	8/2/83	
STK NO.		

Valhalla Scientific Inc.
SAN DIEGO, CA

4300B DISPLAY PCB

SCALE	CODE IDENT	SIZE	DRAWING NO	REV
SHEET 1 OF 2	53504	D	4300-073	B

ECO	LTR	DESCRIPTION	DATE	APPROVED
	A	RELEASED W.P.W. 8-15-83	8-15-83	PDW.
0122	B	ADD NUTS TO FAN MTG.	11-2-83	PDW.
0173	C	CHANGED SCREW SIZE (#13)	12-6-83	PDW
0366	D	P/L CHANGE	3-6-84	PR
0243	E	P/L CHANGE	5-7-84	R
442	F	CHG J3,4,7,8 TERM	7-2-84	R
640	G	P/L CHANGE DPM	2-8-85	PDW
955	H	ADDED SECOND TERMINAL BOARD DGL	5-14-87	CRE

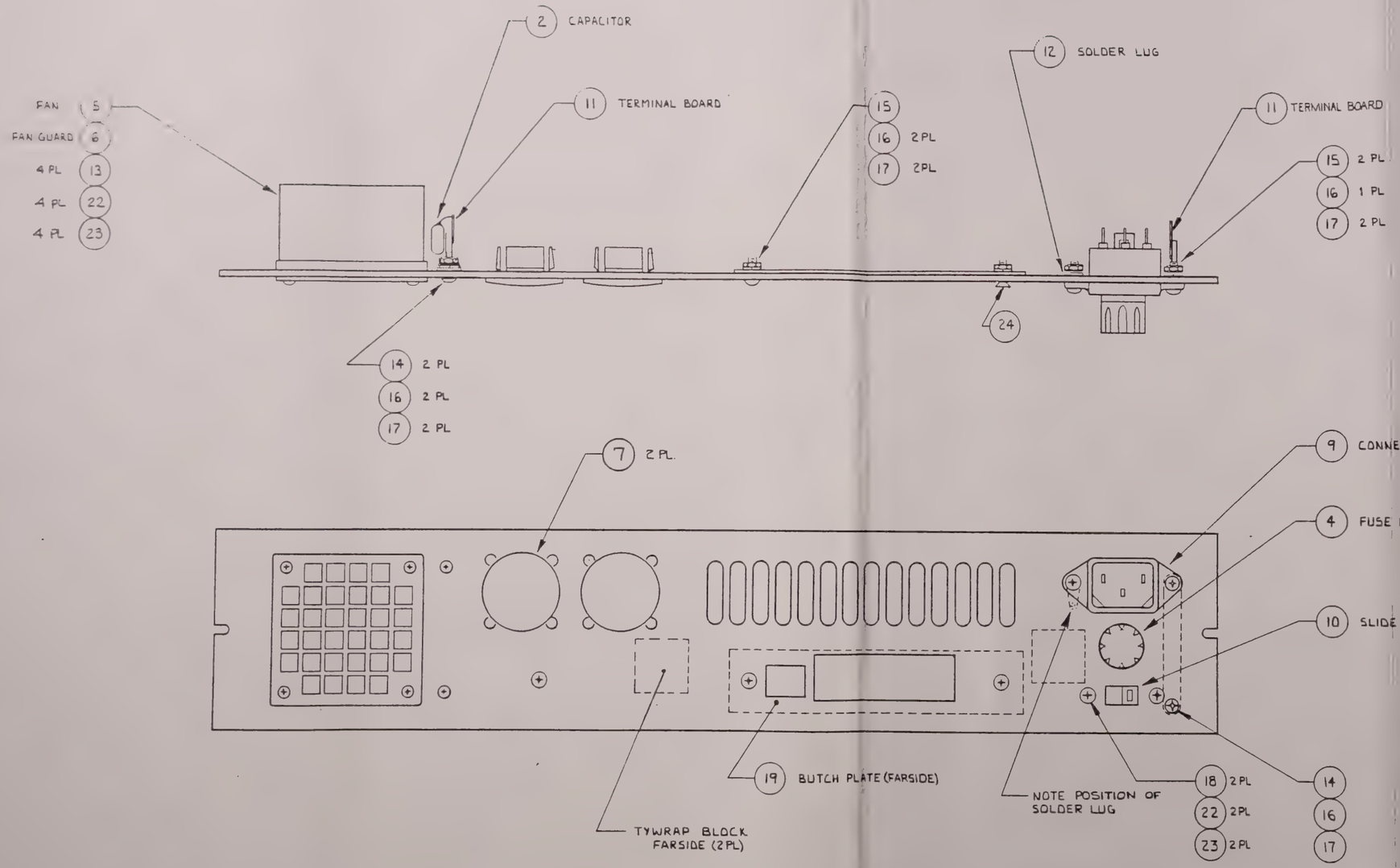

DASH NO	QTY REQD	NEXT ASSEMBLY	USED ON
	1	4300-401	4300B

TOLERANCES
X = ± 30'
.XX = ± .03
.XXX = ± .010

BREAK ALL SHARP CORNERS AND EDGES. MACH SURFACES 64

MATERIAL

FINISH

DRAWN W.P.W. 8-9-83
CHECKED 8/15/83
APPR 8/15/83
STK NO

Valhalla Scientific Inc.
SAN DIEGO, CA

4300B REAR PANEL ASSY.

SCALE NONE
SHEET 1 OF 3
CODE IDENT 53504
SIZE D
DRAWING NO 4300-402
REV H

NOTES:

1 ALL WIRES ARE 22 AWG.

ECO	LTR	DESCRIPTION	DATE	APPROVED
	A	RELEASED WPW	12-8-83	PW

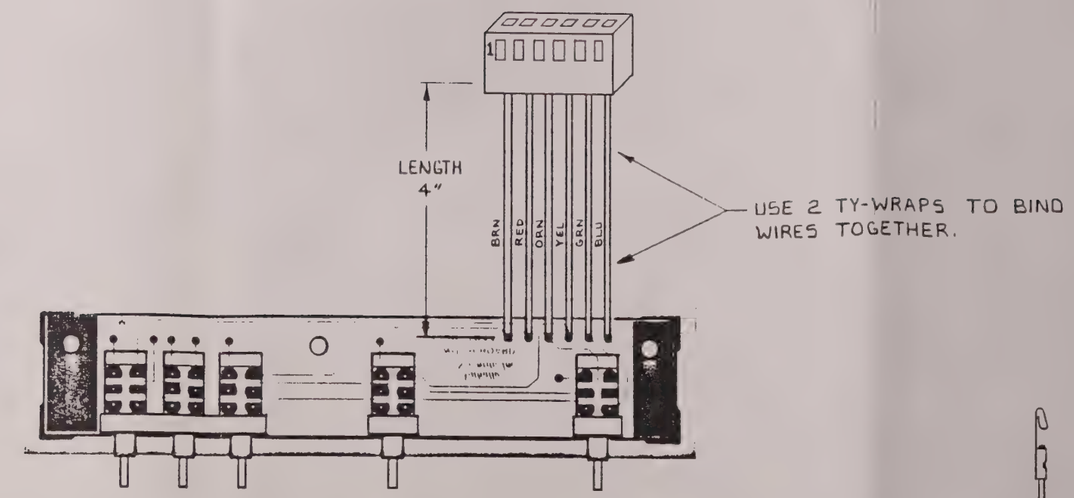

NOTE: CRIMP WIRE TO TERMINAL THEN INSERT INTO PROPER HOUSING SLOT.

DASH NO	QTY REQD	NEXT ASSEMBLY	USED ON
	1	4300-400	430DB

TOLERANCES
X° = ± 30'
.XX = ± .03
.XXX = ± .010

BREAK ALL SHARP CORNERS AND EDGES. MACH SURFACES 63

MATERIAL

FINISH

DRAWN WPW 12-8-83
CHECKED JM 12/9/83
APPR PW 12-8-83
STK NO

Valhalla Scientific Inc.
SAN DIEGO, CA

THE INFORMATION DISCLOSED HEREIN WAS ORIGINATED BY AND IS THE PROPERTY OF VALHALLA SCIENTIFIC INC. AND EXCEPT FOR RIGHTS EXPRESSLY GRANTED TO THE UNITED STATES GOVERNMENT, VALHALLA SCIENTIFIC INC. RESERVES ALL PATENT, SALE, PROPRIETARY, DESIGN, MANUFACTURING, USE AND REPRODUCTION RIGHTS THERETO

SWITCH P.C.B. ASSEMBLY

SCALE	CODE IDENT	SIZE	DRAWING NO	REV
NONE	53504	C	4300-604	A

SHEET 2 OF 2

4300-604 A

SECTION XII
PARTS LIST

12.1 GENERAL

The parts lists of this section are reproductions of factory parts lists. The designators are those of the diagrams in Section XI. When ordering replacement parts, provide the reference designator, manufacturer's part number, manufacturer's name and Valhalla part number if contained in the parts list. The manufacturer is identified in the parts list by a federal stock number. A list of manufacturer's federal stock codes is provided as an appendix to this manual for identification of manufacturers.

Valhalla Scientific Inc.	PARTS LIST	BCD INTERFACE	MODEL 4300	DWG NO 4300-609	REV E

#	REF DES	VALHALLA PART NO	DESCRIPTION	CODE IDENT	MFG PART NO	QTY. I	QTY. N	I	N		REMARKS
1											
2	J1	5-10169	CONNECTOR,24PIN	02660	57-20240-2	1					
3	IC1-5	3-30039	IC QUAD LATCH	27014	CD4042BE	5					
4	IC6	3-30147	IC 4BIT ADDER	27014	CD4008BE	1					
5	IC7	3-30055	IC OUAD OR GATE	27014	CD4071BE	1					
6	IC8	3-30136	IC NOR GATE	27014	CD4002BE	1					
7		4-30076	B.C.D. P.C.B.	53504	4300-709	1					
8	R1,2	1-01081	RES, 100k ohm 1/4W	81349	RC07GF104J	2					
9		5-10444	TERMINAL HOUSING, 20 PIN	MOLEX	22-01-2201	1					
10		5-10340	CONNECTOR,TERMINAL	MOLEX	08-05-0114	20					
11											
12											
13			WASHER FLAT		#8	2					
14		5-10244	HARDWARE,CONNECTOR	AMPHENOL	552633-3	1					
15		4-10303	BUTCH PLATE BLD	53504	4300-211	1					
16											
17											
18											
19											
20											
21											
22											
23											

NOTES: SHEET 3 Of 3 IS ASSY DWG

Valhalla Scientific Inc.	PARTS LIST	BCD INTERFACE	MODEL 4300	DWG NO 4300-609	REV E

#	REF DES	VALHALLA PART NO	DESCRIPTION	CODE IDENT	MFG PART NO	QTY. I	QTY. N	I	N		REMARKS
			WIRES:								
			BROWN 72"		24AWG						
			RED 72"		24AWG						
			ORANGE 72"		24AWG						
			YELLOW 72"		24AWG						
			GREEN 72"		24AWG						
			BLUE 72"		24AWG						
			VIOLET 72"		24AWG						
			GREY 72"		24AWG						
			WHITE 72"		24AWG						
			BLACK 72"		24AWG						

NOTES:

Valhalla Scientific Inc.

PARTS LIST

MAIN PCB

MODEL 4300 B

DWG NO 4300-602

REV 0

#	REF DES	VALHALLA PART NO	DESCRIPTION	CODE IDENT	MFG PART NO	QTY. I	QTY. N	I	N		REMARKS
1											
2											
3	A1	4-30109	PCB, MAIN		4300-702	1					
4											
5	C102	2-60002	CAP, PAPER .1µF	I.C.	225P10491	1					
6	C103, C205,	2-30001	CAP, TAN 10µF/25V	SPRAGUE	T390C106M025AS	6					
	207, 209, 211, 212										
7											
8	C206	2-40054	CAP, ELEC 2200µF/25V	I.C.	228TTA025	1					
9	C201, C203	2-90006	CAP, POLY 1µF		65B1A105J	3					
10	C202	2-90003	CAP, POLY 5µF		625B1A505J	1					
11	C208, C210	2-40013	CAP, ELEC 470µF/50V	I.C.	477TA050B	2					
12	C204	2-50000	CAP, POLY .22µF			1					
13	D103, D104	3-20011	DIODE, RECT.	MOT.	1N1183A	2					
14	D105, D106	3-20012	DIODE, RECT.	MOT.	1N1183RA	2					
15	D107 - D116	3-20000	DIODE, SIGNAL	MOT.	1N4148	15					
	201-203, 205, 206										
16	D118	3-20040	DIODE ZENER 30V		1N5256	1					
17	D204	3-20017	DIODE, ZENER 9.1V	MOT.	1N5239	1					
18	D207 - D212	3-20002	DIODE, RECT.	MOT.	1N4001	6					
19	D117	3-20005	DIODE, ZENER 6.2V	MOT.	1N5234	1					
20	IC101	3-30326	IC, DUAL OP-AMP	NAT.	LM358AN	1					
21	IC102	3-30201	IC, DUAL OPTO COUPLER	LITRONIX	ILCT6	1					

NOTES: SHEET 6 IS ASST DWG

SHT 1 OF 6

Valhalla Scientific Inc.

PARTS LIST

MAIN PCB

MODEL 4300 B

DWG NO 4300-602

REV 0

#	REF DES	VALHALLA PART NO	DESCRIPTION	CODE IDENT	MFG PART NO	QTY. I	QTY. N	I	N		REMARKS
22											ECR 1003
23	IC201	5-02007	OSCILLATOR, STATEK	STATEK	~~PX01000KHZ-A~~	1					
24	IC202	3-30114	IC, A-D CONV.	INTERSIL	ICL7103		1				ECR 1003
25	IC203	3-30113	IC, A-D CONV.	INTERSIL	ICL 8068		1				ECR 1003
26	IC204	3-30106	IC, OP-AMP	BURR BROWN	LF411CN	1					ECR 1148
27	IC103, 205	3-30122	IC, VOLTAGE REF.	NAT.	LM399	2					ECR 1003
28	IC206	3-30170	IC, OP-AMP	PMI	OP-07DP	1					
29	IC207	3-30327	IC, QUAD SWITCH	SILICONIX	DG201A	1					
30	IC208	3-30034	IC, VOLTAGE, REG	NAT.	LM7805	1					
31	IC 209	3-30036	IC, VOLTAGE, REG	NAT.	LM7815	1					
32	IC 210	3-30037	IC, VOLTAGE, REG	NAT.	LM7915	1					
33	R116	1-01045	RES, FXD 2KΩ 5%	81349	RC07GF202J	1					
34	R121, 125, 128,	1-01041	RES, FXD 1KΩ 5%	81349	RC07GF102J	6					
	208, 212										
35	R105, R219	1-20051	RES, W.W., 8.95KΩ	ELLIOT	48 .05%	2					
36	R106	1-10072	RES, FXD, 64.9KΩ 1%	81349	RN60C6492F	1					
37	R107	1-20050	RES, W.W., 909Ω	ELLIOT	72	1					
38	R108	1-10071	RES, FXD, 6.49KΩ 1%	81349	RN60C6491F	1					
39	R109	1-20049	RES, W.W. 90.9Ω	ELLIOT	72	1					
40	R110	1-10070	RES, FXD, 649Ω 1%	81349	RN60C6490F	1					
41	R111	1-20048	RES. W.W 9.09Ω	ELLIOT	60	1					
42	R112	1-10069	RES, FXD, 64.9Ω 1%	81349	RN60C649RF	1					
43	R113	1-20047	.909Ω, .1% (Lollipop)	Goldstar	R0004	1					

NOTES:

Valhalla Scientific Inc.

PARTS LIST

MAIN PCB

MODEL 4300 B

DWG NO 4300-602

REV ①

#	REF DES	VALHALLA PART NO	DESCRIPTION	CODE IDENT	MFG PART NO	QTY. I	QTY. N	I	N		REMARKS
44	R114	1-10068	RES, FXD 7.15Ω 1%	81349	RN60C7R15F	1					
45	R115	1-20123	RES. W.W. .101Ω	GOLD STAR	R-0008	1					
46	R117	1-20122	RES. W.W. 46.5KΩ	ELLIOTT	4300-021	1					
47	R118, R216	1-20121	RES W.W. 7.25KΩ	ELLIOTT	4300-020	2					
48											
49	R123	1-10024	RES, FXD 140Ω 1%	81349	RN60C140RF	1					
50	R103, 104	1-01061	RES, FXD 10KΩ 5%	81349	RC07GF103J	5					
	R201, 209, 217										
51	R122	1-01043	RES, FXD 1.5KΩ 5%	81349	RC07GF152J	1					
52	R124	1-01026	RES, FXD 220Ω 5%	81349	RC07GF221J	1					
53	R126	1-10085	RES, FXD 249Ω 1%	81349	RN60C249RF	1					
54	R204	1-01100	RES, FXD 1MΩ 5%	81349	RC07GF105J	1					
55	R129	—	FACTORY SELECT RESISTOR	81349	RN60------		1				
56	R205	1-01007	RES, FXD 10Ω 5%	81349	RC07GF100J	1					
57	R206	1-01070	RES. FXD 33KΩ 5%	81349	RC07GF333J	1					
58	R207	1-01086	RES. FXD 220KΩ 5%	81349	RC07GF224J	1					
59	R210, R211	1-01081	RES. FXD 100KΩ 5%	81349	RC07GF104J	2					
60	R213	1-20024	RES W.W. 59.1KΩ	GOLDSTAR	GS803-59K1-.05%-5W	1					
61	R214, R215	1-20016	RES, W.W. 1.00KΩ	ELLIOTT		2					
62											
63	R218	1-20076	RES, W.W. 89.95KΩ	ELLIOT		1					
64	R220	1-20074	RES, W.W 995Ω	ELLIOT		1					
65	R120, R127	1-01033	RES, FXD, 470Ω, 5%	81349	RC07GF471J	2					

NOTES:

Valhalla Scientific Inc.	PARTS LIST	MAIN PCB	MODEL 4300 B	DWG NO 4300-602	REV 0

#	REF DES	VALHALLA PART NO	DESCRIPTION	CODE IDENT	MFG PART NO	QTY. I	QTY. N	I	N		REMARKS
66	RLH	5-03045	RELAY, SPST 10 A	GUARDIAN	1345-1A-6VDC	1					
67	RLA	5-03092	RELAY, CRADLE, 1C, 10A, 6V	GUARDIAN	1345-1C-16 VDC	1					
68	RLB, RLJ, RLG	5-03072	RELAY, DPDT 5V	AROMAT	DS2E-DC5V	3					
69	RLC-RLF,	5-03012	RELAY, REED 5V	SIGMA	PRME 1A 005	5					
	RLK										
70	RV101, RV105	1-50012	RES, VAR 10KΩ	BOURNS	68WR-10K	3					
71	RV201,										
72	RV102, RV202,	1-50018	RES, VAR 10Ω	BOURNS	68WR-10Ω	3					
	RV205										
73	RV103, RV107	1-50014	RES, VAR 100Ω	BOURNS	68WR-100Ω	3					
	RV204										
74	RV104	1-50013	RES, VAR 1KΩ	BOURNS	68WR-1K	1					
75	RV106	1-50024	RES, VAR 100KΩ	BOURNS	68WR-100K	1					
76	RV203	1-50029	RES, VAR 500Ω	BOURNS	68WR-500Ω	1					
77											
78	TR103	3-10036	TRANSISTOR, VMOS	I.R.	IRF133	1					
79	TR104, TR105	3-10010	TRANSISTOR PNP	MOT	2N4402	2					
80	TR106	3-10000	N-CHANNEL JFET		U1899E	1					ECR 1003
81	PL1, PL2	5-10399	CONN. ASSY 20 PIN DIL	VALHALLA	4300-054	2					
82	PL3 A/B	5-10368	WAFER ASSY 4 PIN	MOLEX	22-03-2041	1					
83	PL5	5-10398	WAFER ASSY 2 PIN	MOLEX	22-03-2021	1					
84											
85	D119	3-20028	DIODE SIGNAL SCHOTTKY		1N5711	1					ECR 1003

NOTES:

0

Valhalla Scientific Inc.	PARTS LIST	MAIN PCB	MODEL 4300 B	DWG NO 4300-602	REV

#	REF DES	VALHALLA PART NO	DESCRIPTION	CODE IDENT	MFG PART NO	QTY. I	QTY. N	I	N		REMARKS
86		5-10211	HEATSINK - TO220	WAKE-FIELD	6106-B14	3					
87	XIC202	5-10295	SOCKET, DIL, 28 PIN	BURNDY	DILB 28P-108	1					
88	XIC203	5-10041	SOCKET DIL 14 PIN	BURNDY	8514-01	1					
89											
90											
91			SCREW, PHIL, PAN, STAIN.		4-40 X 3/8"	3					
92			SCREW, PHIL, PAN, STAIN		6-32 X 5/16"	2					
93			NUT, RAD. HEX		4-40	9					
94			NUT, RAD HEX		6-32	2					
95			WASHER, FLAT		#4	3					
96			WASHER, INT STAR		#6	4					
97			WASHER, SPLIT LOCK		#4	3					
98											
99			WIRE, BUS 12AWG		12AWG, BUS, 6"	1					
100											
101		S-10449	CABLE-TIE 14" x .15"		PLT41-M	1					
102		5-10266	FOAM TAPE		ACCRUBBER 1/2 x 3/16	1"					
103			HEAT SHRINK TUBING		1/16" DIA.	8"					

NOTES:

Valhalla Scientific Inc.	PARTS LIST	SWITCH PCB	MODEL 4300 B	DWG NO 4300-604	REV A

#	REF DES	VALHALLA PART NO	DESCRIPTION	CODE IDENT	MFG PART NO	QTY. I	QTY. N	I	N		REMARKS
			SWITCH PCB ASST.		4300-604	X					
1		4-30111	PCB, SWITCH		4300-704	1					
2											
3	SW1, SW2	5-03003	SWITCH, PUSH BUTTON		CENTRALAB	2					
4	SW4	5-03075	SWITCH, PUSH BUTTON		4300-055	1					
5											
6	SK1	5-10337	CONN., HOUSING 6WAY	MOLEX	22-01-2066	1					
		5-10340	CONN, PIN, CRIMP	MOLEX	08-05-0114	6					
7											
8			WIRE, 22 AWG BROWN		22AWG 8" BRN	1					
9			WIRE, 22AWG RED		22AWG 8" RED	1					
10			WIRE, 22 AWG ORANGE		22AWG 8" ORN	1					
11			WIRE, 22 AWG YELLOW		22AWG 8" YEL	1					
12			WIRE, 22AWG GREEN		22AWG 8" GRN	1					
13			WIRE, 22AWG BLUE		22AWG 8" BLUE	1					

NOTES: SHEET 2 IS ASST. DWG

SHT 1 OF 2

Valhalla Scientific Inc.	PARTS LIST	DISPLAY PCB	MODEL 4300 B	DWG NO 4300-603	REV H

#	REF DES	VALHALLA PART NO	DESCRIPTION	CODE IDENT	MFG PART NO	QTY. I	QTY. N	I	N		REMARKS
			DISPLAY PCB ASS.		4300-603	X					
1		4-30110	PCB, DISPLAY		4300-703	1					
2	C3	2-60002	CAP, MYLAR .1 µf			1					
3	C1	2-20021	CAP, MICA 27 pF		CM05FD270J03	1					
4	C2	2-30001	CAP, TAN 10 µF		T390C106M025AS	1					
5	D1	5-01005	DIODE, LED RED		5082-4480B	1					
6	D2, D3, D4, D6→12	3-20000	DIODE, SIGNAL		1N4148	10					
7	DS1-DS4	5-01011	DIODE, LED RED		5082-4655	15					
	DS6-DS16										
8	DS5	5-01013	DIODE, LED GREEN		5082-4955	1					
9	DS17	5-01024	DISPLAY, LCD	IEE	LCD5660R25K	1					
10											
11	IC1	3-30184	IC, HEX INVERTER		74LS04N	1					
12	IC2	3-50018	IC, PROM		3-30082	1					
13	IC3	3-30210	IC, BCD-DECIMAL CONV		74145N	1					
14	IC8	3-30048	IC, QUAD AND		CD4081	1					
15	IC5	3-30025	IC, QUAD XOR		CD4030	1					
16	IC6	3-30022	IC, DISPLAY DRIVER		CD4054B	1					
17	IC7	3-30325	IC, DISPLAY DRIVER		ICM7211A	1					
18	IC9	3-30055	IC, QUAD OR		CD4071	1					
19											
20	R14	1-01033	RES, FXD, 470Ω		RC07GF471J	1					

NOTES: SHEET 3 IS ASSY DWG

Valhalla Scientific Inc.	PARTS LIST	DISPLAY PCB	MODEL 4300 B	DWG NO 4300-603	REV H

#	REF DES	VALHALLA PART NO	DESCRIPTION	CODE IDENT	MFG PART NO	QTY. I	QTY. N	I	N		REMARKS
21	R3, R12	1-01041	RES, FXD 1 KΩ		RC07GF102J	2					
22	R1, R2, R4, R6-11	1-01061	RES, FXD 10 KΩ		RC07GF103J	9					
23	R13	1-01065	RES, FXD 20 KΩ		RC07GF203J	1					
24	RN1	1-40003	RES, NET 10 KΩ		316A 103	1					
25	RN2	1-40009	RES, NET 220Ω		316B 221	1					
26	R5	1-01026	RES, FXD, 220Ω		RC07GF221J	1					
27	SW1	5-03033	SWITCH, ROT BCD		PA0160-0346	1					
28	TR8	3-10013	TRANSISTOR NPN	Moto	2N4401	1					
29	TR1, TR6	3-10026	TRANSISTOR, VMOS	INTERSIL	VN 10 KM	2					
30	TR2-TR5, TR7	3-10010	TRANSISTOR, PNP	MOTO.	2N 4402	5					
31											
32	PL1	5-10372	WAFER, 6 WAY	MOLEX	22-03-2061	1					
33	PL2, PL3	5-10313	WAFER, 10 WAY	MOLEX	22-03-2101	3					
34		5-10368	WAFER, 4 WAY	MOLEX	22-03-2041	1					
35											
36	SK1, SK2	5-10294	SOCKET, 20 PIN DIL	BURNDY	DILB20P-108	2					
37	XIC2	5-10008	SOCKET, 16 PIN DIL	T.I	C8516-01	1					
38	XIC7	5-10246	SOCKET, 40 PIN DIL	BURNDY	DILB40P-111	1					
39											
40											
41											
42			SHRINK TUBING		3/16 DIA. BLK.	A/R					
43											

NOTES: SHEET 3 IS ASSY DWG.

H

Valhalla Scientific Inc.	PARTS LIST	REAR PANEL ASSY	MODEL 4300 B	DWG NO 4300-402	REV

#	REF DES	VALHALLA PART NO	DESCRIPTION	CODE IDENT	MFG PART NO	QTY. I	QTY. N	I	N		REMARKS
			REAR PANEL ASSY		4300-402	X					
1		4-10405	REAR PANEL	53504	4300-219	1					
2	C1	2-80005	CAP, MYLAR 2.7μF	MEPCO	713AIRR275PK101SN	1					
3	F1	5-04011	FUSE, 3A SLO-BLO		313-003	1					120 VOLTS
4	FX1	5-10018	HOLDER, FUSE	75915	342004A	1					
5		5-10389	FAN	MICRONEL	V624L 115A	1					
6		5-10390	GUARD, FAN	MICRONEL	V600	1					
7		5-10482	HOLE PLUG, BLK, 1" DIA	HEYCO	2713	2					
8											
9	PL1	5-10063	CONNECTOR, POWER	82389	EAC-301	1					
10	SW2	5-03017	SWITCH, SLIDE 115/230	82389	47227LFR	1					
11	TB1, TB2	5-10050	BOARD, TERMINAL	83330	3005	2					ECR#955
12		5-10086	LUG, SOLDER	SMITH	1412-6	1					
13			SCREW, PHIL, PAN, STAIN		4-40 x 5/8"	4					
14			SCREW, PHIL, PAN, STAIN		6-32 x 1/4"	3					ECR#955
15			SCREW, PHIL, PAN, STAIN		6-32 x 3/8"	3					ECR#955
16			WASHER, SPLIT LOCK		#6	6					ECR#955
17			NUT, RADIO HEX		6-32 UNC	7					ECR#955
18			SCREW, PHIL, PAN, STAIN		4-40 x 1/4"	2					ECR#955
19		4-10305	PLATE, BUTCH	53504	4300-213	1					
20		5-10441	BLOCK, TY-WRAP, SMALL		AMB25-A	2					ECR#955
21		5-10019	TY-WRAP 3 1/2"	16956		5					

NOTES: SHEET 3 IS ASSY DWG

Valhalla Scientific Inc.	PARTS LIST	REAR PANEL ASSY	MODEL 4300 B	DWG NO 4300-402	REV H F

#	REF DES	VALHALLA PART NO	DESCRIPTION	CODE IDENT	MFG PART NO	I	N	I	N		REMARKS
22			WASHER, SPLIT LOCK		#4	6					ECR#955
23			NUT, RADIO HEX		#4-40	6					ECR#955
24			SCREW, PHIL, FLAT, STAIN		6-32 x 3/8"	1					ECR#955

NOTES:

SHT 2 OF 3

E

Valhalla Scientific Inc.	PARTS LIST	OUTPUT PCB	MODEL 4300 B	DWG NO 4300-605	REV

#	REF DES	VALHALLA PART NO	DESCRIPTION	CODE IDENT	MFG PART NO	QTY. I	QTY. N	I	N		REMARKS
			OUTPUT PCB ASSY		4300-605	X					
1		4-30112	PCB, OUTPUT		4300-705	1					
2											
3	D102	3-[illegible]032	DIODE, ZENER		1N4550	1					
4	D101	3-20012	DIODE, RECT.		1N1183RA	1					Motorola Only
5	R101, R102	1-30003	RES, FXD .1Ω		4330	2					
6			WASHER, INT TOOTH		#10	1					
7	TR101, TR102	3-10037	NPN DARLINGTON (TO-3)	MOLO	2NG282	2					
8			NUT, RADIO HEX		#10-32	1					
9	[illegible]	4-[illegible]	HEAT SINK		4300-220	1					
10			SCREW, PHIL, PAN, STAIN		6-32 X 9/16"	4					
			NUT, RADIO HEX, STAIN		6-32	4					
12			WASHER, INT TOOTH		#6	4					
13	[illegible]	5-[illegible]	INSULATOR, MICA TO-3	[illegible]	2635	2					
14			NUT, HEX, STAIN		1/4 X 28	1					
15			WASHER, INT TOOTH		1/4	1					
16			WIRE, 20AWG, BROWN		20 AWG, 6", BRN	1					
17			WIRE, 14AWG, RED		14 AWG, 6", RED	1					
18			WIRE, 20AWG, ORANGE		20 AWG, 6", ORN	1					
19			WIRE, 14AWG GREEN		14 AWG, 6" GRN	1					
20			WIRE, 20AWG, YELLOW		20 AWG, 6", YEL	1					

NOTES: SHEET 2 IS ASSY. DWG

SHT 1 OF 2

Valhalla Scientific Inc.

PARTS LIST

CHASSIS

MODEL 4300 B

DWG NO 4300-401

REV K

#	REF DES	VALHALLA PART NO	DESCRIPTION	CODE IDENT	MFG PART NO	QTY. I	QTY. N	I	N		REMARKS
1											
2	A1		PCB ASSY, MAIN	53504	4300-602	1					
3	A2		PCB ASSY, DISPLAY	53504	4300-603	1					
4	A3		PCB ASSY, OUTPUT	53504	4300-605	1					
5	A4		PCB ASSY, SWITCH	53504	4300-604	1					
6			REAR PANEL ASSY	53504	4300-402	1					
7		4-10527	FRONT PANEL	53504	4300-100	1					UNSCREENED PANEL SYL# 4-10401
8											
9		4-10458	SIDE RAIL	53504	2724-215	2					
10		4-10407	PLATE, BOTTOM.	53504	4300-217	1					
11		4-10827	2701C TOP + BOT. COVER		2701-223	1					
12		4-10333	BEZEL	53504	2724-205	4					
13		4-10404	BAFFEL	53504	4300-218	1					
14		4-10332	BLOCK, CORNER	53504	2724-204	4					
15		5-10015	FEET, RUBBER, WHITE		2084W / 467WHT.	4					
16		5-10431	STANDOFF, MF, #6-32, 1/4 HEX X 3/8	SMITH	8254	2					
17		5-10369	STAND OFF, HINGED	KEYSTONE	354	3					
18		5-10096	STAND OFF, 6-32 X 1"	SMITH	2124-1"	4					
19		5-10288	SPACER #6 X 1/2"	SMITH	8503	4					
20		5-10371	SPACER #6 X 3/16"	SMITH	9207	3					
21		4-10304	STRAP, CAP MOUNTING	53504	4300-212	2					
22		92-06004	#6 PHIL TRUSS 1/4"			4					ECO# 1197
23		5-10067	LINE CORD	83330	17250	1					

NOTES: SHEET 4 IS ASSY DWG.
ECO# 243 - REV. F

Valhalla Scientific Inc.

PARTS LIST

CHASSIS

MODEL 4300 B

DWG NO 4300-401

REV K

#	REF DES	VALHALLA PART NO	DESCRIPTION	CODE IDENT	MFG PART NO	QTY. I	QTY. N	I	N		REMARKS
24											
25	C101	2-40007	CAP, ELEC .1F/20V			1					
26											
27											
28											
29											
30	J1, J5	5-10021	POST, BINDING - RED	SUPERIOR	BP30RC	2					
31	J2, J6	5-10020	POST, BINDING - BLACK	SUPERIOR	BP30BC	2					
32											
33	SW1	5-03061	SWITCH, POWER	SHADOW	ZFNE1SZUEE110101068	1					
34											
35	SK1	5-10064	CONNECTOR, BNC FEMALE	02660	31-10	1					
36	SK3, SK5	5-10336	HOUSING, 2 PIN	MOLEX	22-01-2026	2					
37		5-10340	TERMINAL, CRIMP	MOLEX	08-05-0114	4					
38											
39	T-1	4-20044	TRANSFORMER		4300-012	1					
40			LUG, RING		#8 x 16AWG	6					
41			LUG, RING		#8 x 20AWG	4					
42		5-10261	BLOCK, TY-WRAP	06383	AMB25-A	7					
43		5-10073	BUTTON, PUSH, BLACK	Centralab	B-304 BLK	5					
44		5-10680	KNOB, W/ SKIRT	ROGAN	GR1-11-CSK-7-M	1					
45											
46											

NOTES:

Valhalla Scientific Inc.	PARTS LIST	CHASSIS	MODEL 4300 B	DWG NO 4300-401	REV K

#	REF DES	VALHALLA PART NO	DESCRIPTION	CODE IDENT	MFG PART NO	QTY. I	QTY. N	I	N		REMARKS
47											
48			SCREW, PHIL, PAN, BLK		6-32 X 1/4	2					
49			SCREW, PHIL, PAN, STAIN		6-32 X 3/8	9					
50			SCREW, PHIL, PAN, STAIN		6-32 X 9/16	4					
51			SCREW, PHIL, FLAT, STAIN		6-32 X 3/8	21					
52			SCREW, PHIL, FLAT, STAIN		8-32 X 1/2	4					
53			NUT, RADIO HEX,		6-32	13					
54			WASHER, FLAT		#6	16					
55			WASHER, SPLIT LOCK		#6	20					
56			WASHER, INT. STAR		#6	8					
57			SCREW, PHIL, FLAT, STAIN		6-32 X 9/16"	8					
58		5-10019	TY-WRAP 3 1/2"	16956	WRN 3 1/2	25					
59		4-20043	FERRITE BEAD		FB-43-2401	1					
60			WIRE, COAXIAL		RG174, 72"	1					
61			WIRE, 16 AWG BLACK		55" 16AWG, BLK	1					
62			WIRE, 16 AWG BROWN		20" 16AWG, BRN	1					
63			WIRE, 16 AWG RED		55" 16AWG, RED	1					
64			WIRE, 16 AWG ORN		20" 16AWG, ORN	1					
65			WIRE, 16 AWG GRN		4" 16AWG, GRN	1					
66			WIRE 20 AWG BRN		10" 20AWG BRN	1					
67			WIRE 20 AWG ORN		10" 20AWG, ORN	1					
68			INT. STAR, WASHER 82°		#6	6					ECR #872
69											

NOTES:

Valhalla Scientific Inc.	PARTS LIST		MODEL 4300B TL-438	DWG NO 4300-402	REV F

#	REF DES	VALHALLA PART NO	DESCRIPTION	CODE IDENT	MFG PART NO	I	N	I	N		REMARKS
1	A1		[illegible] IEEE [illegible]			1					
2											
3			WIRE, RED		22 AWG	1'					ECR#856
4			WIRE, BLACK		22 AWG	1'					ECR#856
5		5-10086	SOLDER LUG#6			1					ECR# 1148
6	PL3	5-10444	CONNECTOR, 20 POS.		MOLEX 22-01-2101	1					ECR 778
7	PL2	5-10445	CONNECTOR, 14 POS.		MOLEX 22-01-2141	1					ECR 778
8		5-10340	TERMINAL, CRIMP, FEMALE			24					
9		70-00004	SHRINK TUBING 1/4"			1"					ECR# 1148
10			24 AWG BROWN			48"					ECR#856
11			24 AWG RED			72"					ECR#856
12			24 AWG ORANGE			48"					ECR#856
13			24 AWG YELLOW			48"					ECR#856
14			24 AWG GREEN			48"					ECR#856
15			24 AWG BLUE			48"					ECR#856
16			24 AWG VIOLET			72"					ECR#856
17			24 AWG GRAY			72"					ECR#856
18			24 AWG WHITE			72"					ECR#856
19			24 AWG BLACK			48"					ECR#856
20		80-01516	16 AWG GREEN			8"					ECR# 1148
21		5-10019	CABLE TIE 4" x 1/8"		PANDUIT WRN-4	18					
22		5-10261	BLOCK, ADHESIVE		PANDUIT ABM2S-A	4					

Valhalla Scientific Inc.

PARTS LIST

MODEL: 4300B TL-488

DWG NO: 4300-403

REV: F

#	REF DES	VALHALLA PART NO	DESCRIPTION	CODE IDENT	MFG PART NO	I	N	I	N		REMARKS
23			SCREW FLAT HEAD		6-32 x 1/2	2					
24	IC 6	3-50022	4300 B IEEE		3-30154	1					ECR 954
25	DELETE										
26		4-10305	BUTCH PLATE	53504	4300-213	1					
27			SCREW, PHIL, PAN		6-32 x 3/8	3					
28			WASHER, SPLIT LOCK		#6	3					
29			NUT, RADIO HEX		6-32	3					
30											ECR 954
31	IC 8, IC 10	3-30157	P. I. A.		MC6821P	2					

NOTES: SHEET 3 IS ASSY. DWG.

Valhalla Scientific Inc.	PARTS LIST	OPTION "TB-2"	MODEL 4300B	DWG NO 4300-407	REV D

#	REF DES	VALHALLA PART NO	DESCRIPTION	CODE IDENT	MFG PART NO	QTY. I	QTY. N	I	N		REMARKS
	J3 & J4	5-10065	CONN. 4PIN, MALE, CHASSIS ASSY	AMPHENOL	MS3102A16-9P-639	2					
2		5-10340	TERMINAL, CRIMP, FEMALE	MOLEX	08-05-0114	2					
3		5-10336	SOCKET, 2 WAY	MOLEX	22-05-2021	1					
4		—	SCREW, PHIL, PAN, STAIN	—	4-40 x 3/8"	8					
5		—	NUT, RADIO, HEX	—	#4-40	8					
6		—	WASHER, SPLIT, LOCK	—	#4	8					
7		—	SHRINK TUBING	—	1/4 DIA BLK.	2"					ECR#979
8		5-10060	CONN 4PIN, FEMALE, [illegible]	AMPHENOL		2					ECR [illegible]
9		5-10033	STRAIN RELIEF THREADED	BENDIX	MS 3057-8 SILVER	2					ECR [illegible]
10											
11		WIRE:	———								
12			RED, 20"		14 AWG	20"					
13			BLK, 20"		14 AWG	20"					
14			COAX CABLE,		RG-174	24"					ECR#979
15			BLK, 22 AWG		22 AWG	2"					ECR#979
16			SHRINK TUBING		1/8 DIA. BLK	2"					ECR#979
17											
18											
19											
20											
21											
22											

NOTES: FOR ASSY. AND WIRING SEE SHT. 2.

REF.DES.	STOCK #	QUANTITY A	QUANTITY T	QUANTITY N	DESCRIPTION	MANUFACTURING/PURCHASING DATA	ALTERNATE
18	05-10244	1			IEEE connector hardware	AMP 552633-3	
28	04-30084	1			IEEE 488 Board	DWG 1000-700	
29	04-10296	2			IEEE/IOX support bracket	DWG 2300-216	
31	90-06006	4			#6-32 x 3/8" Phil Pan S.S.		
32	98-06001	4			#6 Split Lock Washer		
33	97-06000	4			#6-32 Standard Hex Nut		
40	90-02006	2			#2-56 x 3/8" Phil Pan S.S.		
41	98-02001	2			#2 Split Lock Washer		
42	97-02001	2			#2-56 Radio Hex Nut		
C1	02-30014	1			100u 10V Tantalum Bead		
C2	02-20018	1			33p 500V Mica	CM05FD330J03	
C3	02-20018	1			33p 500V Mica	CM05FD330J03	
C4	02-10006	1			0.01u 50V Ceramic disc	8121-050-651-103M	
C5	02-10006	1			0.01u 50V Ceramic disc	8121-050-651-103M	
C6	02-10006	1			0.01u 50V Ceramic disc	8121-050-651-103M	
C7	02-10006	1			0.01u 50V Ceramic disc	8121-050-651-103M	
C8	02-30002	1			33u 10V Tantalum Bead		
C9	02-30002	1			33u 10V Tantalum Bead		
D1	03-20000	1			Diode, general purpose	1N4148 or 1N914	
IC1	03-30156	1			Octal 3-State Buffer	74ALS541N or 74LS541N	
IC2	03-30157	1			Octal GPIB Transceiver (Thin Package)	Motorola MC3447P3	
IC3	03-30157	1			Octal GPIB Transceiver (Thin Package)	Motorola MC3447P3	
IC4	03-30158		1		GPIB to MPU Interface	MC68488P	
IC5	03-30160		1		Microprocessor with RAM (1MHz)	MC6802P	
IC7	03-30155	1			Binary to 1 of 8 decoder	74ALS138N or 74LS138N	
IC8	03-30159		1		Peripheral Interface Adapter (1.5MHz)	MC68A21P	
IC9	03-30159		1		Peripheral Interface Adapter (1.5MHz)	MC68A21P	
IC10	03-30159		1		Peripheral Interface Adapter (1.5MHz)	MC68A21P	
IC11	03-30159		1		Peripheral Interface Adapter (1.5MHz)	MC68A21P	
IC12	03-30184	1			Hex invertor	74ALS04N or 74LS04N	
IC13	03-30034	1			Regulator,+5V,0.5A,TO202 or TO220	78M05CP or LM340T-5.0	
R1	01-01061	1			10K 5% 1/4W Carbon Film	RC07GF103J	
R2	01-01061	1			10K 5% 1/4W Carbon Film	RC07GF103J	
R3	01-01061	1			10K 5% 1/4W Carbon Film	RC07GF103J	
R4	01-01061	1			10K 5% 1/4W Carbon Film	RC07GF103J	
R5	01-01061	1			10K 5% 1/4W Carbon Film	RC07GF103J	
R6	01-01061	1			10K 5% 1/4W Carbon Film	RC07GF103J	
R7	01-01061	1			10K 5% 1/4W Carbon Film	RC07GF103J	
R8	01-01061	1			10K 5% 1/4W Carbon Film	RC07GF103J	
R9	01-01061	1			10K 5% 1/4W Carbon Film	RC07GF103J	
R10	01-01061	1			10K 5% 1/4W Carbon Film	RC07GF103J	
R11	01-01061	1			10K 5% 1/4W Carbon Film	RC07GF103J	
S1	05-03091	1			Switch,Dip,Rt. Angle,5 Position	Grayhill,76PSB05	
SK5	05-10243	1			Connector, 24 way, right angle	AMP 552791-1	
TR1	03-10013	1			NPN Transistor (TO92)	2N4401	
TR2	03-10013	1			NPN Transistor (TO92)	2N4401	
TR3	03-10013	1			NPN Transistor (TO92)	2N4401	
TR4	03-10013	1			NPN Transistor (TO92)	2N4401	
XIC4	05-10246	1			Socket, dil, 40 pin	Burndy DILB40P-11	
XIC5	05-10246	1			Socket, dil, 40 pin	Burndy DILB40P-11	
XIC6	05-10295	1			Socket, dil, 28 pin	Burndy DILB28P-108	

REF.DES.	STOCK #	QUANTITY A	T	N	DESCRIPTION	MANUFACTURING/PURCHASING DATA	ALTER
XIC8	05-10246	1			Socket, dil, 40 pin	Burndy DILB40P-11	
XIC9	05-10246	1			Socket, dil, 40 pin	Burndy DILB40P-11	
XIC10	05-10246	1			Socket, dil, 40 pin	Burndy DILB40P-11	
XIC11	05-10246	1			Socket, dil, 40 pin	Burndy DILB40P-11	
Y1	05-02004	1			Crystal,MPU,4MHz	HC18-4MHz	

Federal Supply Codes for Manufacturers

00656
Aerovox Corp.
New Bedford, Massachusetts

00686
Film Capacitors, Inc.
Passaic, New Jersey

00779
AMP Inc.
Harrisburg, Pennsylvania

00853
Sangamo Electric Company
Pickens, South Carolina

01121
Allen-Bradley Co.
Milwaukee, Wisconsin

01255
Litton Industries, Inc.
Beverly Hills, California

01281
TRW Electronic Comp.
Semiconductor Operations
Lawndale, California

01295
Texas Instruments, Inc.
Dallas, Texas

01686
RCL Electronics Inc.
Manchester, New Hampshire

02114
Ferroxcube Corp.
Saugerties, New York

02131
General Instrument Corp.
Westwood, Maine

02799
Areo Capacitors, Inc.
Chatsworth, California

03508
General Electric Co.
Syracuse, New York

03797
Genisco Technology Corp.
Compton, California

03877
Transistron Electronic Corp.
Wakefield, Massachusetts

03911
Clairex Corp.
Mt. Vernon, New York

04009
Arrow Hart Inc.
Hartford, Connecticut

04217
Essex International Inc.
Anaheim, California

04222
AVX Corp.
Myrtle Beach, Florida

04423
Telonic Industries
Laguna Beach, California

04713
Motorola Inc.
Phoenix, Arizona

04946
Standard Wire & Cable
Los Angeles, California

05276
Pomona Electronics Co., Inc.
Pomona, California

05277
Westinghouse Electric Corp.
Youngwood, Pennsylvania

05397
Kemet, Union Carbide Corp.
New York, New York

05574
Viking Industries
Chatsworth, California

05820
Wakefield Engineering Inc.
Wakefield, Massachusetts

06001
General Electric Co.
Columbia, South Carolina

06383
Panduit Corp.
Tinley Park, Illinois

06473
Bunker Ramo Corp.
Chatsworth, California

06555
Beede Electrical Instrument Co.
Penacook, New Hampshire

06743
Clevite Corp.
Cleveland, Ohio

07088
Kelvin Electric Company
Van Nuys, California

07256
Silicon Transistor Corp.
Chelmsford, Massachusetts

07263
Fairchild Semiconductor
Mountain View, California

07344
Bircher Co., Inc.
Rochester, New York

07597
Burndy Corp.
Rochester, New York

07716
I R C Incorporated
Burlington, Iowa

07910
Teledyne Semiconductor
Hawthorne, California

08065
Accurate Rubber and Plastics Co.
San Diego, California

08261
Spectra Strip Corp.
Garden Grove, California

08530
Reliance Mica Corp.
Brooklyn, New York

08806
General Electric Co.
Cleveland, Ohio

09026
Babcock Electronics Corp.
Costa Mesa, California

09214
G. E. Co. Semi-Conductor
Auburn, New York

09353
C and K Components
Watertown, Massachusetts

09922
Burndy Corp.
Norwalk, Connecticut

09969
Dale Electronics Inc.
Yankton, S. Dakota

11236
CTS of Berne
Berne, Indiana

11403
Best Products Co.
Chicago, Illinois

11503
Keystone Columbia Inc.
Warren, Michigan

11532
Teledyne Relays
Hawthorne, California

11711
General Instrument Corp.
Hicksville, New York

12014
Chicago Rivet & Machine Co.
Bellwood, Illinois

12060
Diodes, Inc.
Chatsworth, California

12136
Philadelphia Handle Co.
Camden, New Jersey

12405
Hysol Corporation
El Monte, California

12406
Elpac, Incorporated
Fullerton, California

12615
U.S. Terminals Inc.
Cincinnati, Ohio

12617
Hamlin Inc.
Lake Mills, Wisconsin

12697
Clarostat Mfg. Co.
Dover, New Hampshire

12969
Unitrode Corp.
Watertown, Massachusetts

13103
Thermalloy Co., Inc.
Dallas, Texas

13327
Solitron Devices Inc.
Tappan, New York

13454
Texas Crystals
River Grove, Illinois

13511
Amphenol Cadre Div.
Los Gatos, California

13606
Use 56289
Sprague Electric Co.
Concord, New Hampshire

14099
Semtech Corp.
Newbury Park, California

14655
Cornell-Dublier Electronics
Newark, New Jersey

14752
Electro Cube Inc.
San Gabriel, California

14936
General Instrument Corp.
Hicksville, New York

15801
Fenwal Electronics Inc.
Framingham, Massachusetts

15818
Teledyne Semiconductors
Mountain View, California

15849
Useco Inc.
Van Nuys, California

15898
International Business
Machines Corp.
Essex Junction, Vermont

16332
Replaced by 28478

16473
Cambridge Scientific Ind.
Cambridge, Maryland

16758
Delco Electronics
Kokomo, Indiana

17856
Siliconix, Inc.
Santa Clara, California

18324
Signetics Corp.
Sunnyvale, California

Federal Supply Codes for Manufacturers (cont.)

18612
Vishay Intertechnology Inc.
Malvern, Pennsylvania

18722
R C A
Mountaintop, Pennsylvania

18927
GTE Sylvania Inc.
Titusville, Pennsylvania

21604
Bucheye Stamping Co.
Columbus, Ohio

21845
Solitron Devices Inc.
Riveria Beach, Florida

22767
ITT Semiconductors
Palo Alto, California

23936
Pamotor Div.
Burlingham, California

24355
Analog Devices Inc.
Norwood, Massachusetts

24655
General Radio
Concord, Massachusetts

25088
Siemen Corp.
Isilen, New Jersey

25403
Amperex Electronic Corp.
Slatersville, Rhode Island

25684
Victoreen Instrument Co., Inc.
Oak Lawn, Illinois

27014
National Semiconductor Corp.
Santa Clara, California

27556
IMB Electronic Products
Santa Fe Springs, California

27264
Molex Products
Downers Grove, Illinois

28213
Minnesota Mining & Mfg. Co.
St. Paul, Minnesota

28480
Hewlett Packard Co.
Palo Alto, California

29083
Monsanto Co., Inc.
Santa Clara, California

29604
Stackpole Components Co.
Raleigh, North Carolina

30323
Illinois Tool Works, Inc.
Chicago, Illinois

30983
Electra/Midland
San Diego, California

32539
Mura Corp.
Great Neck, New York

32897
Erie Technological Products, Inc.
Carlisle, Pennsylvania

32997
Bourns Inc.
Riverside, California

33173
General Electric Co.
Owensboro, Kentucky

34333
Silicon General
Westminister, California

34335
Advanced Micro Devices
Sunnyvale, California

34802
Electromotive Inc.
Kenilworth, New Jersey

37942
P.R. Mallory & Co., Inc.
Indianapolis, Indiana

43543
Nytronics Inc.
Geneva, New York

44655
Ohmite Mfg. Co.
Skokie, Illinois

49671
RCA Corp.
New York, New York

49956
Raytheon Company
Lexington, Massachusetts

50088
Mostek Corp.
Carrollton, Texas

50579
Litronix Inc.
Cupertino, California

51605
Scientific Components Inc.
Linden, New Jersey

53021
Sangamo Electric Co.
Springfield, Illinois

53504
Valhalla Scientific, Inc.
San Diego, California

54294
Cutler-Hammer Inc.
Selma, North Carolina

55026
Simpson Electric Co.
Elgin, Illinois

56289
Sprague Electric Co.
North Adams, Massachusetts

58474
Superior Electric Co.
Bristol, Connecticut

63743
Ward Leonard Electric Co., Inc.
Mount Vernon, New York

65092
Weston Instruments Inc.
Newark, New Jersey

70563
Amperite Company
Union City, New Jersey

70903
Belden Corp.
Geneva, Illinois

71279
Cambridge Thermionic Corp.
Cambridge, Massachusetts

71400
Bussmann Mfg.
Saint Louis, Missouri

71450
CTS Corp.
Elkhart, Indiana

71468
ITT Cannon Electric Inc.
Santa Ana, California

71482
Clare, C.P. & Co.
Chicago, Illinois

71590
Centrelab Electronics
Milwaukee, Wisconsin

71707
Coto Coil Co., Inc.
Providence, Rhode Island

71744
Chicago Miniature Lamp Works
Chicago, Illinois

71785
TRW Electronics Components
Chicago, Illinois

72005
Wilber B. Driver Co.
Newark, New Jersey

72259
Nytronics Inc.
Pelham Manor, New Jersey

72619
Dialight Div.
Brooklyn, New York

72982
Erie Tech. Products Inc.
Erie, Pennsylvania

73138
Bechman Instrument Inc.
Helipot Division
Fullerton, California

73445
Amperex Electronic Corp.
Hicksville, New York

73734
Federal Screw Products, Inc.
Chicago, Illinois

73899
JFD Electronics Co.
Brooklyn, New York

73949
Guardian Electric Mfg. Co.
Chicago, Illinois

74276
General Instrument Corp.
Neptune, New Jersey

74306
Piezo Crystal Co.
Carlisle, Pennsylvania

74970
Johnson E.F., Co.
Waseca, Minnesota

75042
TRW Electronics Components
IRC Fixed Resistors
Philadelphia, Pennsylvania

75378
CTS Knights Inc.
Sandwich, Illinois

75382
Kulka Electric Corp.
Mount Vernon, New York

75915
Littlefuse Inc.
Des Plaines, Illinois

76055
Mallory Controls
Frankfort, Indiana

76493
J.W. Miller Company
Los Angeles, California

76854
Oak Industries Inc.
Crystal Lake, Illinois

77342
Potter & Brumfield Div.
Princeton, Indiana

77638
General Instrument Corp.
Rectifier Division
Brooklyn, New York

78488
Stackpole Carbon Co.
Saint Marys, Pennsylvania

78553
Eaton Corp.
Cleveland, Ohio

80031
Electro-Midland Corp.
Mepco Div.
Norristown, New Jersey

56289
Sprague Products
North Adams, Massachusetts

80294
Bourns Inc., Instrument Div.
Riverside, California

81073
Grayhill, Inc.
La Grange, Illinois

Federal Supply Codes for Manufacturers (cont.)

81095
Triad Transformer Corp.
Venice, California

81312
Winchester Electronics
Div. of Litton Industries Inc.
Oakville, Connecticut

81483
International Rectifier Corp.
Los Angeles, California

81741
Chicago Lock Co.
Chicago, Illinois

82389
Switchcraft Inc.
Chicago, Illinois

82877
Rotron Inc.
Woodstock, New York

82879
ITT Royal Electric Div.
Pawtucket, Rhode Island

83003
Varo Inc.
Garland, Texas

83298
Bendix Corp.
Eatontown, New Jersey

83330
Herman H. Smith, Inc.
Brooklyn, New York

83594
Burroughs Corp.
Plainfield, New Jersey

83740
Union Carbide Corp.
New York, New York

84171
Arco Electronics
Great Neck, New York

84411
TRW Electronic Components
Ogallala, Nebraska

84613
Fuse Indicator Corp.
Rockville, Maryland

84682
Essex International Inc.
Peabody, Massachusetts

86684
Radio Corp. of America
Harrison, New Jersey

88219
Gould Inc.
Trenton, New Jersey

88245
Litton Systems Inc.
Useco Div.
Van Nuys, California

88419
Cornell-Dubilier Electronic Div.
Fuquay-Varian, North Carolina

89730
G.E. Co.
Newark, New Jersey

90201
Mallory Capacitor Co.
Indianapolis, Indiana

56365
Square D Co.
Chicago, Illinois

90303
Mallory Battery Co.
Tarrytown, New York

91094
Essex International Inc.
Newmarket, New Hampshire

91293
Johanson Mfg. Co.
Boonton, New Jersey

91506
Augat Inc.
Attleboro, Massachusetts

91637
Dale Electronics Inc.
Columbus, Nebraska

91662
Elco Corp.
Willow Grove, Pennsylvania

71468
Gremar Mfg. Co., Inc.
ITT Cannon/Gremar
Santa Ana, California

91802
Industrial Devices, Inc.
Edgewater, New Jersey

91833
Keystone Electronics Corp.
New York, New York

91929
Honeywell Inc.
Micro Switch Div.
Freeport, Illinois

92194
Alpha Wire Corp.
Elizabeth, New Jersey

93332
Sylvania Electric Products
Woburn, Massachusetts

94988
Wagner Electric Corp.
Tung-Sol Div.
Newark, New Jersey

95146
Alco Electronic Products Inc.
Lawrence, Massachusetts

95275
Vitramon Inc.
Bridgeport, Connecticut

95303
RCA Corp.
Receiving Tube Div.
Cincinnati, Ohio

95348
Gordo's Corp.
Bloomfield, New Jersey

95712
Bendix Corp.
Franklin, Indiana

97913
Industrial Electronic
Hardware Corp.
New York, New York

97945
Penwalt Corp.
SS White Industrial Products Div.
Piscataway, New Jersey

98278
Malco A. Microdot Co., Inc.
Connector & Cable Div.
Pasadena, California

98291
Sealectro Corp.
Mamaroneck, New York

98388
Royal Industries
Products Div.
San Diego, California

98978
IERC
Burbank, California

99120
Plastic Capacitors, Inc.
Chicago, Illinois

99217
Bell Industries Elect.
Burbank, California

99392
STM
Oakland, California

99515
ITT Jennings Monrovia Plant
Monrovia, California

99779
Use 29587
Bunker-Ramo Corp.
Landsdowne, Pennsylvania

99942
Centrelab Semiconductor
El Monte, California